LUDLUM MODEL 4901P
PANCAKE GM
HAND & SHOE MONITOR

October 2025

Serial No. 289679 and Succeeding

Serial Numbers

LUDLUM MODEL 4901P
PANCAKE GM
HAND & SHOE MONITOR

October 2025

Serial No. 289679 and Succeeding

Serial Numbers

LUDLUM MEASUREMENTS, INC
501 OAK STREET, P.O. BOX 810
SWEETWATER, TEXAS 79556
325-235-5494, FAX: 325-235-4672

STATEMENT OF WARRANTY

Ludlum Measurements, Inc. warrants the products covered in this manual to be free of defects due to workmanship, material, and design for a period of twelve months from the date of delivery. The calibration of a product is warranted to be within its specified accuracy limits at the time of shipment. In the event of instrument failure, notify Ludlum Measurements to determine if repair, recalibration, or replacement is required.

This warranty excludes the replacement of photomultiplier tubes, G-M and proportional tubes, and scintillation crystals which are broken due to excessive physical abuse or used for purposes other than intended.

There are no warranties, express or implied, including without limitation any implied warranty of merchantability or fitness, which extend beyond the description of the face there of. If the product does not perform as warranted herein, purchaser's sole remedy shall be repair or replacement, at the option of Ludlum Measurements. In no event will Ludlum Measurements be liable for damages, lost revenue, lost wages, or any other incidental or consequential damages, arising from the purchase, use, or inability to use product.

RETURN OF GOODS TO MANUFACTURER

If equipment needs to be returned to Ludlum Measurements, Inc. for repair or calibration, please send to the address below. All shipments should include documentation containing return shipping address, customer name, telephone number, description of service requested, and all other necessary information. Your cooperation will expedite the return of your equipment.

LUDLUM MEASUREMENTS, INC.
ATTN: SERVICE DEPARTMENT
501 OAK STREET
SWEETWATER, TX 79556

800-622-0828 325-235-5494
FAX 325-235-4672

Table of Contents

1. INTRODUCTION 1

2. SPECIFICATIONS 3

3. USER OPERATION 5

ASSEMBLY AND DISASSEMBLY 5
Assembly Procedure 5
Disassembly Procedure 6
OPERATIONAL CHECK 6
RADIATION CHECK 7

4. DESCRIPTION OF CONTROLS AND FUNCTIONS 9

5. SAFETY CONSIDERATIONS AND WARNING MARKINGS 11

ENVIRONMENTAL CONDITIONS FOR NORMAL USE 11
CLEANING INSTRUCTIONS AND PRECAUTIONS 11
WARNING MARKINGS AND SYMBOLS 11
ELECTRICAL SAFETY PRECAUTIONS 13
REPLACEMENT OF FUSES 13

6. SETUP 14

SETUP MENU 14

Setup Alarm Menu 14
Setup Background Menu 16
Setup Time Menu 17
Setup Volume Menu 18

READ MENU 19

Read Alarms Menu 19
Read Time Menu 19
Read Volume Menu 20
Password Menu 20

CALIBRATION MENU 22

Display of Hands Count Data 22
Display of Feet Cout Data 22

7. CALIBRATION AND TROUBLESHOOTING 23

CALIBRATION PROCEDURE 23

General 23
Equipment 23
Annual Calibration Verification Procedure 23
TROUBLESHOOTING 24
REPAIR AND CALIBRATION 25
8. RECYCLING 26
9. PARTS LIST 27
HVPS BOARD (DRAWING 436 X 53) 27
LED DRIVER BOARD (DRAWING 420 X 4) 29
MAIN BOARD (DRAWING 215 X 60) 30
LED DISPLAY BOARD (DRAWING 420 X 226) 32
RESISTOR BOARD (DRAWING 2 X 894) 32
ZERO X AMP BOARD (DRAWING 420 X 600) 32
INTERCONNECT BOARD (DRAWING 420 X 178) 33
WIRING DIAGRAM (DRAWING 420 X 162) 33
10. DRAWINGS AND DIAGRAMS 35

Section 1

Introduction

The Model 4901P Beta/Gamma Hand & Shoe Monitor is intended for use as a medium-level beta and gamma contamination monitor. There are four count channels in the standard configuration, monitoring the palms of each hand and the soles of each shoe.

The Model 4901P employs a total of 22 pancake Geiger-Mueller (GM)-type detectors, five in each hand detector (palm side only) and six in each foot detector. LED indicators show status and alarm location. The Model 4901P allows parameter updating by viewing the built-in, 16-character LCD display. Detector counts, background, alarm set points, and all parameters may be viewed on the LCD display.

Switches at each hand detector initiate an interrogation (both switches must activate). Audible alarm and status change indications are standard.

Features of the Model 4901P include: automatic background accumulate with subtract, password protection of parameters, pushbutton adjustment of the alarm audio volume, and simple LED status indicators. All parameters are stored in non-volatile memory, requiring no backup battery.

Model 4901P Hand and Shoe Monitor

Section 2

Specifications

Detectors: pancake-type, halogen-quenched GM

Window: 1.7 ±0.3 mg/cm^2 mica

Energy Response: energy dependent

Background Count Rate:

Hands: 200-250 cpm
Shoes: 250-300 cpm

Detector Effeicnecy (4π):

Hands: 12% for ^{99}TC
12% for ^{137}Cs
3% for ^{14}C
^{137}Cs, 100 cm^2 yields 7%

Shoes: 10% for ^{99}Tc
10% for ^{137}Cs
3% for ^{14}C
(**Note:** This one-inch diameter source was placed across feet bars where shielding was minimal.)
^{137}Cs, 100 cm^2 yields 4%

- **Note:** Data taken with 25 to 47 mm disc sources placed directly over pancake tube, except where noted.

Sensitivity: 85 mV nominal

Counting Capacity: 9999 cpm

Count Time: adjustable from 1 to 99 seconds

Alarm Hold Time: adjustable from 1 to 99 seconds

Background Accumulation Time: adjustable from 1 to 99 seconds

Background Update Interval: adjustable from 1 to 99 minutes. A background count will take place if the machine is not in use at every interval specified by this timer.

Force Update: Background accumulation will be forced within this interval of time if an automatic accumulation has not been made.

Audio: Built-in, unimorph-type speaker (greater than 68 dB at 0.6 m{2 ft})

Power: 95-135 Vac, 50/60 Hz, 50 watts maximum

Fuse: 2 each F-1A, 1 amp, 5 x 20 mm, 250 V

Temperature Range: 0 to 50 °C (32 to 122 °F) (LCD limits temperature range)

Size: 101.6 x 74.9 x 38.1 cm (40 x 29.5 x 15 in.) (H x W x D)

Weight: 20.4 kg (45 lb)

Compatible Firmware Versions:

Firmware is a computer program located into permanent memory of the instrument. This hardware (memory) cannot be changed in its user environment.

This manual works with instrument firmware versions:
Model 4901P: 420-03-N01.

The firmware number displays when the instrument is first turned on, or may be viewed through the diagnostic menu.

Section 3

User Operation

Assembly and Disassembly

The vertical sections of the hand detector are now shipped detached from the foot detector section. Four screws (8-32X1/2 inch) are used to reattach the vertical sections. A connector is used to distribute power/signals to and from the detectors and main electronics.

Note

The floor pan is wired such that either upright sections may be attached to either side. The floor pan, therefoe, is non-polarized, and the main electronics will recognize the right and left floor detectors correctly.

Assembly Procedure

1) Carefully unpack the two upright sections and the floor pan section.

2) Loosen the four screws located on the end of the foot detector section. Leave the upper two screws in place with about 0.64 cm (0.25 in.) of thread showing. Remove the lower two screws.

3) Lay one of the uprights (detector face down) on the floor or workbench near the opening on either end of the foot section.

4) Look inside the opening for the header that will accept the red plug at the lower end of the upright. Carefully attach the plug to this header.

Note:

The wires should exit the header/plug pointing downward. Make sure the plug is positioned properly (there should be no pins showing on either side of the plug).

5) Carefully raise the upright and hang the assembly on the two screws that were left in Step 2 above. The upper holes in the ears of the upright are slotted.

6) Start the two lower screws and tighten all four of these securely.

7) Repeat Steps 2 through 6 above for the remaining upright section.

8) Attach the power cord and turn the unit ON.

9) Check that the unit returns to normal service (**READY** LED will light) after the 60-second update interval has expired.

Disassembly Procedure

1) Turn the power OFF to the Model 4901P and remove the power cord from the receptacle.

2) Place the unit on a workbench or other suitable work area.

3) Loosen the four screws holding one of the upright sections.

4) Leave the upper two screws in place and completely remove the lower screws.

5) Carefully lift the upright off and away from the foot section while disconnecting the harness from the floor header.

6) Reinstall the lower two screws and tighten them to prevent loss.

7) Pack the upright sections and the foot detector section well enough to prevent contact with each other and to provide good cushioning.

Note:

At least 5 centimeters (two inches) of packing should be provided.

Operational Check

To ensure that these instruments are functioning correctly, an operational check should be performed routinely or before using the instrument. This operational check should also be done after any maintenance (ie. detector replacement) is done on the instrument.

This check verifies that the instrument is turned on, that the settings are appropriate, and that the system alarms when the detectors are exposed to excess radiation (above background level). Ludlum Measurements suggests that this operational check be performed after setup and before use.

As long as the system passes the operational check, no calibration or other checks are necessary. If the response or any function of the portal monitor changes, the instrument should be checked and brought into compliance with the manufacturer's original specifications.

Check each of the detectors for sensitivity to beta/gamma radiation. Verify that you get a RADIATION ALARM, using a check source (^{137}Cs, 1 μCi).

Repeat alarm checks for all four sections to confirm that all detectors are functioning.

Radiation Check

A count starts when both of the hand switches are held down. If the LCD was in a SETUP menu, then the LCD returns to the READY menu and a normal count will take place. If the LCD was in READ COUNTS menu the LCD will remain in this menu and the interrogation will proceed normally.

Note:

When monitoring counts via the CAL MODE, an interrogation will not be available (the READY LED will be extinguished).

Prior to operation, the monitor must be allowed to update the background count. This mandatory update occurs just after power-up and after expiration of the Force Update interval timer. New background count data is compared to the low and high-background set points that have been programmed into the unit. If the set points have been exceeded, an alarm is given (check individual LEDs for offending channel) and the unit returns to updating background.

In order to make a radiation check, follow the steps below:

- The green READY light must be lit in order to use the instrument.
- Step up and position both hands over the detectors.
- Place palms flat against the bottom screen and push inward until the green COUNTING lights turns on.
- The yellow SHORT COUNT light will turn on if the hands are

removed before the count is complete.

- Once count is complete, the green CHECK OK light or the read ALARM light will turn on. Smaller red lights will turn on with the ALARM light to indicate the location of the alarm.

- Remove hands and step off the instrument.

Section 4

Description of Controls and Functions

READOUT: LCD, one line, 16-character alphanumeric display.

EXIT KEY: moves back one menu selection.

- **Speed Trick:** Press and hold the EXIT key to quickly return to the READY menu.

INCREMENT (Up Arrow ↑) BUTTON: moves up one line in the current menu. Within parameter setup, a digit increments by one. An on/off parameter toggles to the other state.

MINUTES: a three-decade thumbwheel switch used for presetting count time.

DECREMENT (Down Arrow ↓) BUTTON: moves down one line in the current menu. Within parameter setup, a digit decrements by one. An on/off parameter toggles to the other state.

SELECT KEY: selects the current menu choice.

- **Speed Trick:** If the SELECT key is held down while a count channel is being displayed, the alarm level for that channel displays. Releasing the SELECT key returns to the count for that channel.

SAVE KEY: Recessed pushbutton that saves all parameters to non-volatile memory. This button can only be operated by inserting a small screwdriver or pin through the hole. All of the microprocessor RAM is transferred to flash memory when this button is pushed. Any changes made to variables only change the current microprocessor RAM. If the Model 4901P is turned off prior to saving changes, these changes are lost. To save parameter changes, press the **SAVE** button before turning the Model 4901P off. Upon power-up, the flash memory is loaded into the microprocessor.

LEDs: (Refer to drawings at the back of this manual for LED layout.)

READY LED**:** must be lit prior to any interrogation.

- **Note:** It is possible to begin an interrogation from any setup prompt (when all LEDs are on). A count may be started by pressing either of the hand switches, causing the READY LED to activate, followed by the COUNTING LED.

COUNTING LED**:** indicates that a hand count is in progress. Deactivating either of the hand switches prior to expiration of the count time will cause this light to go off and the SHORT COUNT LED to come on. When the count is complete, the CHECK OK or ALARM LED activates. CHECK OK lights for two seconds or until the hand switches are released. The SHORT COUNT LED stays on for the alarm hold time or until a hand switch is reactivated. If no hand switch is sensed during the short count time, then the Model 4901P goes back to the ready state, lighting the READY LED.

CHECK OK LED**:** indicates that a count has been completed and no alarms were sensed. This LED will stay on until the hand switches are released, or for two seconds.

ALARM: indicates that a count has exceeded the alarm set point. The individual LH, RH, LF, or RF LED lights as soon as alarm is sensed and remain(s) lit for the alarm hold time. The Model 4901P will return to the ready state. The master ALARM LED and audible alarm will activate after the end of the count time and the user has removed both hands from the switches. This condition will exist for the duration of the ALARM HOLD TIME.

SHORT COUNT LED**:** indicates that a count was in progress and the user raised off either hand switch. The SHORT COUNT LED stays on for the alarm hold time or until the hand switches are re-activated. A short count resets the count time. If no hand switch is sensed during the short count time, then the Model 4901P goes back to the ready state lighting the READY LED.

POWER/OK LED**:** indicates that 5 Vdc is available on the central processor board.

LH, RH, LF, RF LEDs**:** indicates which channel in a count has alarmed. These light as soon as an alarm is sensed. When the count is complete, the COUNT OK will not light. The ALARM LED and audio stay on for the alarm hold time, then the Model 4901P goes back to the ready state, lighting the READY LED.

POWER ON/OFF: switch to turn instrument on and off.

Section 5

Safety Considerations and Warning Markings

Environmental Conditions for Normal Use

Indoors or outdoors (clement weather only)

No maximum altitude

Temperature range of -20 to 50 °C (-4 to 122 °F)

Maximum relative humidity of less than 95% (non-condensing)

Mains supply voltage range 85-265 Vac

Maximum transient voltage of 1500 Vac

Installation Category (Overvoltage Category) II (as defined by IEC 1010-1)

Pollution Degree 2 (as defined by IEC 644)

Cleaning Instructions and Precautions

The Model 4901P may be cleaned externally with a damp cloth, using only water as the wetting agent. Do not immerse the instrument in any liquid. Observe the following precautions when cleaning:

1. Turn the instrument OFF and disconnect the instrument power cord.
2. Allow the instrument to sit for one minute before cleaning.

Warning Markings and Symbols

Caution!

The operator or responsible body is cautioned that the protection provided by the equipment may be impaired if the equipment is used in a manner not specified by Ludlum Measurements, Inc.

Caution!

Verify instrument voltage input rating before connecting to a power converter. If the wrong power converter is used, the instrument and/or power converter could be damaged.

The Model 4901P is marked with the following symbols:

PROTECTIVE CONDUCTOR TERMINAL (per IEC 417, No. 5019) – designates the central grounding point for the safety ground. This symbol is visible inside the chassis.

ALTERNATING CURRENT (AC) (IEC 417, No. 5032) - designates an input receptacle that accommodates a power cord intended for connection to AC voltages. This symbol appears on the AC panel.

CAUTION (per ISO 3864, No. B.3.1) – designates hazardous live voltage and risk of electric shock. During normal use, internal components are hazardous live. This instrument must be isolated or disconnected from the hazardous live voltage before accessing the internal components. This symbol appears on the AC panel. **Note the following precautions:**

Warning!

The operator is strongly cautioned to take the following precautions to avoid contact with internal hazardous live parts that are accessible using a tool:
1. Turn the instrument power OFF and disconnect the power cord.
2. Allow the instrument to sit for one minute before accessing internal components.

The "**crossed-out wheelie bin**" symbol notifies the consumer that the product is not to be mixed with unsorted municipal waste when discarding; each material must be separated. See section 8, "Recycling" for further information.

Electrical Safety Precautions

- Do not expose the unit to rain or an environment where it may be splashed by water or other liquids, as doing so may result in fire or electric shock.

- Use the unit only with the voltage supply specified on the unit. Using a voltage supply higher than that which is specified may result in fire or electric shock.

- Do not cut, kink, or otherwise damage nor modify the power supply cord. In addition, avoid using the power cord in close proximity to heaters, and never place heavy objects – including the unit itself – on the power cord, as doing so may result in fire or electric shock.

- Avoid installing or mounting the unit or its power supply in unstable locations, such as on a rickety table or a slanted surface. Doing so may result in the unit falling down and causing personal injury and/or property damage.

Replacement of Fuses

Warning!

For continued protection against risk of fire, replace only with fuses of the specified type and current rating!

Section 6

Setup

This section gives instructions on how to use the keys to set up the instrument. Examples of keystroke sequences are given for each parameter. For information on using the instrument to make a radiation check, see Section 7.

Setup Menu

The setup menu has six choices:

1. Set up ALARMS MENU
2. Set up BACKGROUND MENU
3. Set up CAL MENU
4. Set up PASSWORD MENU
5. Set up TIME MENU
6. Set up VOLUME MENU

To change a parameter, access the variable of interest through the setup menus using the **SELECT** and **increment/decrement** "↑/↓" keys. Press the **SELECT** key to change the parameter. The cursor becomes visible and blinks on the variable to change. On multiple digit variables, press the **SELECT** key to access the next digit.

- **Speed Trick:** After changing a parameter, press and hold SELECT until a beep is heard. This will quickly exit the setup parameter mode. The setup mode has a blinking cursor.

Set up Alarm Menu

The SETUP ALARM menu allows changes to be made to the individual count alarms. All alarm and background values are in units of CPM (counts per minute).

Individual Alarms

The individual channel alarms are left hand, right hand, left foot, and right foot (LH, RH, LF, and RF).

If the counts are greater than, or equal to, the count alarm set point for an individual channel during the count time, then the individual alarm LED (**LH**, **RH, LF, RF**) activates. When the count time expires and an alarm is present, the alarm audio sounds and the main **ALARM** LED activates. The alarm will sound for the preset ALARM HOLD TIME.

T access the SETUP ALARM menu:

- Turn the instrument ON. Wait for READY to display on the LCD.
- Press SELECT once to select the setup menu. SETUP menu appears.
- Press SELECT once to execute the setup menu. ALARMS menu appears.
- Press SELECT once to execute the alarms menu. LH ALARM XXXX appears. The XXXX is a number between 0 and 9999. This is the current left-hand alarm setting.
- To change the current setting, press **SELECT** to activate the first digit. Use **increment/decrement** "↑/↓" to change first digit as desired. Press **SELECT** to activate the second digit. Use **increment/decrement** "↑/↓" to change second digit as needed. Press **SELECT** to temporarily save the setting.
- From the LH ALARM XXXX selection, the increment/decrement keys may be pressed to access further parameters.
- Press the EXIT key to exit back to the ALARMS menu.

Note:

This parameter must be greater than or equal to the BKGROUND TIME parameter below and less than or equal to the FORCE UPDATE parameter above.

Low Background Alarms

Set the parameter for LO BKGND-RH to a value that would allow detection of a bad detector. For backgrounds near 100 counts in one minute, this might be 50. Set the LO BKGND-LH, LF, and RF parameter to similar values.

High Background Alarms

Set the high background parameters to preclude nuisance alarms from varying backgrounds. For backgrounds near 100 counts per minute, choose 175. Set both the LH/RH and LF/RF high-background set points.

Setup Background Menu

Access the SETUP menu:

- With READY displayed on LCD.
- Press SELECT once to select the setup menu. STEUP menu appears.
- Press SELECT once again to execute the setup menu. ALARMS menu appears.
- Press decrement ↓ once to advance to the BACKGROUND MENU.
- Press SELECT once to activate menu.
- Press SELECT and use either increment or decrement ↑↓ key to toggle the background subtract feature on or off as desired. This will normally be left in the ON position. Activate and exit the on/off prompt by pressing the SELECT key one last time.
- Press the decrement ↓ key to move to the FORCE UPDATE interval timer. Press the SELECT key to edit this timer as desired. This interval is the maximum time allowed between updates and would normally be set to 15 or 30 minutes. This parameter should be set prior to setting the Update Interval Time or Background Count Time and must always be larger than or equal to either of those (see below). Save and exit this menu item by pressing the SELECT key one last time.
- Press the decrement ↓ key to select the BKGROUND TIME. This is the actual background count time and may be set from 1 to 99 seconds. Longer count times will tend to smooth the background subtract data. Typical count times might be 60 seconds.

Note:

This number must be less than or equal to the FORCE UPDATE and BKGND UPD INT parameters as described above.

Setup Time Menu

This menu sets the count time and alarm hold time. The alarm hold time also applies to the SHORT COUNT LED.

To access the SETUP TIME menu:

- With READY displayed on the LCD.
- Press SELECT once to select the setup menu. SETUP menu appears.
- Press SELECT once again to execute the setup menu. ALARMS menu appears.
- Press the **increment "↑"** key twice. TIME MENU appears.
- Press SELECT once to execute the setup time menu. COUNT TIME XX appears. The XX is a number between 0 and 99 (seconds).
- Press **SELECT** to activate the first digit. Use **increment/decrement** "↑/↓" to change the first digit. Press **SELECT** to activate the second digit. Use **increment/decrement** "↑/↓" to change the second digit. Press **SELECT** to temporarily save the parameter.
- Use **increment/decrement** "↑/↓" to change to the next setting.
- Press the EXIT key to exit back to the TIME menu.

Count Time

The count time is adjustable between 1 and 99 seconds. This time applies to a count activated by the hand switches. Both of the hand switches must be held down for the duration of the count. If they are not, the SHORT COUNT LED activates.

Alarm Hold Time

The alarm hold time is adjustable from 1 to 99 seconds. This time applies to a hand count that has alarmed. If the ALARM LED lights, then this light and alarm audio will be held for the alarm hold time. The SHORT COUNT LED will also light for this hold time.

Note:

Remember to press the SAVE key in order to store parameters in non-volatile memory prior to power-down.

Setup Volume Menu

The volume menu sets only the ALARM volume. The Model 4901P emits a beeping sound after various events (mode change, parameter change, etc.). This beeping volume is always at the maximum and is not adjustable.

To access the SETUP VOLUME menu:

- READY is displayed on the LCD.
- Press SELECT once to select the setup menu. SETUP menu appears.
- Press SELECT once again to execute the setup menu. ALARMS menu appears.
- Press the increment key once. VOLUME MENU appears.
- Press SELECT once to execute the setup volume menu. ALARM VOLUME XXX appears. The XXX is a number between 0 and 255. This variable sets from 255 (lowest level) to 000 (maximum level). Any audio alarm uses this volume set point. The beep audio is not affected by this setting.
- Press SELECT to activate the first digit. Use increment/decrement "↑/↓" to change the first digit. Press SELECT to activate the second digit. Use increment/decrement "↑/↓" to change the second digit. Repeat for third digit. Press SELECT to save.
- Press the EXIT key to exit back to the VOLUME menu.

Note:

Remember to press the SAVE key in order to store any changed parameters in non-volatile memory prior to power-down.

Read Menu

The read menu has three choices:

1. Read Alarms Menu
2. Read Time Menu
3. Read Volume Menu

The read menu accesses the same menu structure as the Setup Menu. **However, no variables may be changed from the read menu.**

Read Alarms Menu

To access the READ ALARMS menu:

- Turn the instrument ON. Wait for **READY** to display on LCD.
- Press **SELECT** once to select the setup menu. SETUP menu appears.
- Press increment key **"↑"** once. READ menu appears.
- Press **SELECT** once to execute the read menu. ALARM menu appears.
- Press **SELECT** once to execute the alarms menu. GLOBAL ALARM XX appears. The XX is a number between 0 and 99.
- Use the increment/decrement "↑/↓" keys to change to the next alarm channel.
- Press the **EXIT** key to exit back to the ALARMS menu.

Read Time Menu

This menu reads all the time parameters of the Model 4901P. The user cannot change these values from this menu.

To access the READ TIME menu:

- Turn instrument ON. Wait for READY to display on LCD.
- Press SELECT once to select the setup menu. SETUP menu appears.

- Press decrement key **"↓" once.** READ menu appears.
- Press SELECT once to execute the read menu. ALARMS menu appears.
- Press decrement **"↓"** key twice. VOLUME menu appears.
- Press SELECT once to execute the time menu. ALARM VOLUME XXX appears. The XXX is a number between 0 and 255.
- Use the increment/decrement "↑/↓" keys to change to other parameters.
- Press the EXIT key to exit back to the VOLUME menu.

Read Volume Menu

This menu reads all of the volume parameters of the Model 4901P. The user cannot change these values from this menu.

To access the READ VOLUME menu:

- Turn the instrument ON. Wait for READY to display on LCD.
- Press SELECT once to select the setup menu appears.
- Press decrement key ↓ once. READ menu appears.
- Press SELECT once to execute the read menu. ALARMS menu appears.
- Press decrement ↓ key twice. VOLUME menu appears.
- Press SELECT once to execute the time menu. ALARM VOLUME XXX appears. The XXX is a number between 0 and 255.
- Use the increment/decrement ↓/↑ keys to change to other parameters.
- Press the EXIT key to exit back to the VOLUME menu.

Password Menu

This menu sets the password and whether the password is ON or OFF.

To access the PASSWORD menu:

- With READY displayed on the LCD.
- Press SELECT once to select the setup menu. SETUP menu appears.
- Press SELECT once to execute the setup menu. ALARMS menu appears.
- Press the increment or decrement "↑/↓" keys until the PASSWORD menu appears.
- Press SELECT once to execute the PASSWORD ON/OFF menu. PASSWORD: XXX appears. The XXX is either ON or OFF>
- Press SELECT to change the password status. Use increment/decrement "↑/↓" to change to either ON or OFF. Press SELECT to temporarily save parameter.
- Use increment/decrement "↑/↓" to change the next setting. ENTER PASS: XXXX appears.
- To reset the PASSWORD to 0000, hold down the SAVE key while turning on the instrument.
- Press SELECT to activate the first digit. Use increment decrement "↑/↓" to change the first digit. Press SELECT to activate the second digit. Use increment/decrement "↑/↓" to change the second digit. Repeat for third and fourth digits.
- Press the EXIT key to exit back to the TIME menu.

Note:

Press the SAVE key in order to store parameters in non-volatile memory prior to power-down.

Calibration Menu

The Cal Menu has two choices:

Display of Hands Count Data

Selecting this mode provides a one-second updating display of the current count from the hand detectors (in counts per second). This mode is used for setting or checking the threshold level and as a general diagnostic using a pulser or source counts from the detectors.

Display of Feet Count Data

Selecting this mode provides fast, one-second updating display of the current count from the feet detectors (in counts per second). This mode is used for setting or checking the threshold level and as a general diagnostic using a pulser or source counts from the detectors.

Section 7

Calibration and Troubleshooting

Calibration Procedure

General

The Model 4901P was set up for 80 mV sensitivity and 900 Vdc operation for GM type detectors.

Equipment

1. Ludlum Model 500 pulser or equal
2. High-impedance voltmeter or high-voltage measurements (10 megohm)
3. 8-15 V DC power supply with modular connection (Pin 2 is positive and Pin 3 is ground.), polarity protected.

Annual Calibration Verification Procedure

Calibration of the Model 4901P is accomplished by checking the threshold level at each preamplifier board (LMI #5436-040) located on each detector.

The design threshold level is 80 mV and operating high voltage is approximately 900 Vdc.

- Using a clip lead cable, connect the Model 500 pulser to the detector ballast board and apply power to the board.
- Sweep the pulser amplitude for a negative leading edge 70 to 90 mV pulse and confirm counter turn on at 80 mV ±5 mV. If necessary, adjust R1 (THS) until pulses just appear.
- Check for 900 Vdc ±10 V at the detector ballast board. If necessary, adjust R4 (HV ADJ) for 900 Vdc at the ballast board input.

Trouble Shooting

The block diagram of the Model 4901P can be thought of as four detectors connected to a multi-counter main board. All detectors operate from a single, high-voltage power supply (HVPS). This supply is located on the main electronics chassis just below the main board. The count data appears at this main board as 5-volt digital pulses. These pulses are generated on the preamplifier board at each of the four detectors. Calibration is performed on each detector and consists of setting the lower level threshold or discriminator (LLD) and setting the HV bias to the proper operating point.

The user LED board presents status information to the user via a serial data stream from the main controller board. This serial data is placed into two drivers that directly drive the LEDs.

The main control board also sends data to the LCD display. The LCD is intended for setup purposes as well as diagnostics. It is not necessary for the user to view the LCD screen under normal conditions. Count data can be reviewed in the display if desired.

The "pancake" GM detectors used in this model are simple in application but can cause headaches when "ganged" in parallel as in the Model 4901P. One bad detector can cause the entire unit to become noisy, due mainly to the use of the single HVPS.

Normally, only one detector becomes noisy and the culprit can be found in that particular array. A quick visual check may reveal the bad detector. Inspect the thin membrane cover of each of the pancakes to see if one of them has lost its gas. The membrane will look loose or wrinkled and when touched (carefully) will make a crackling sound. This one will definitely need replacement.

If you find no broken membranes and you are in a relatively quite area, you can listen to each tube for the one that is noisy. Each event in the tube is an avalanche of charge (a spark) so they can be heard rather easily, provided you have adequate HV bias. A single bad probe can pull the HV bias down and prevent all others from working.

As a last resort, the detector array in question will have to be removed and each detector signal wire unplugged until the offending pancake has been located. The signal wires have a connector on one end to facilitate fast, no-solder removal.

There are no batteries required for parameter storage during power-down. All parameters are saved in flash memory when the Store button is pressed. Press Store anytime you change parameters and choose to use them from then on. If you do not press Store, the old values will reappear after the next

power-down and up cycle.

Caution!:

To avoid electrical shock, ensure that the instrument is off for at least one minute before touching the connections.

Repair and Calibration

To return an instrument for repair or calibration, provide sufficient packing material to prevent damage during shipment.

Every returned instrument must be accompanied by an Instrument Return Form, which can be downloaded from the Ludlum website at www.ludlums.com. Find the form by clicking the "Support" tab and selecting "Repair and Calibration" from the drop-down menu. Then choose the appropriate Repair and Calibration division where you will find a link to the form.

Section 8

Recycling

Ludlum Measurements, Inc. supports the recycling of the electronics products it produces for the purpose of protecting the environment and to comply with all regional, national, and international agencies that promote economically and environmentally sustainable recycling systems. To this end, Ludlum Measurements, Inc. strives to supply the consumer of its goods with information regarding reuse and recycling of the many different types of materials used in its products. With many different agencies – public and private – involved in this pursuit, it becomes evident that a myriad of methods can be used in the process of recycling. Therefore, Ludlum Measurements, Inc. does not suggest one particular method over another, but simply desires to inform its consumers of the range of recyclable materials present in its products, so that the user will have flexibility in following all local and federal laws.

The following types of recyclable materials are present in Ludlum Measurements, Inc. electronics products, and should be recycled separately. The list is not all-inclusive. Nor does it suggest that all materials are present in each piece of equipment:

- Batteries
- Glass
- Aluminum and Stainless Steel
- Circuit Boards
- Plastics
- Liquid Crystal Display (LCD)

Ludlum Measurements, Inc. products, which have been placed on the market after August 13, 2005, have been labeled with a symbol recognized internationally as the "crossed-out wheelie bin." This notifies the consumer that the product is not to be mixed with unsorted municipal waste when discarding; each material must be separated. The symbol will be placed near the AC receptacle, except for portable equipment where it will be placed on the battery lid.

Section 9 Parts List

	Reference	Description	Part Number
Model 4901P Hand & Shoe Monitor	UNIT	Completely Assembled Model 4901P Hand & Shoe Monitor	48-3009
HVPS Board, Drawing 436 x 53	BOARD	Assembled HVPS	5436-042
CAPACITORS	C001	10µF 20V	04-5655
	C002	1µF 35V	04-5656
	C011-C014	0.0047µF 3KV C	04-5547
	C021-C023	0.0047µF 3KV C	04-5547
	C024	0.0027µF 3KV C NPO	04-5520
	C031	0.0027µF 3KV C NPO	04-5520
	C101	1µF 35V	04-5656
	C102	10µF 20V	04-5655
	C111	0.0047µF 3KV C	04-5547
	C112	0.01µF 50V X7R	04-5664
	C113	0.1µF 50V X7R	04-5663
	C114	0.01µF 50V X7R	04-5664
	C121	100pF 3KV 30GAT10	04-5532
	C122	0.0047µF 3KV C	04-5547
	C123	100pF 100V COG	04-5661
	C124	0.1µF 50V X7R	04-5663
	C128	1 µF 16V	04-5701
	C131	68µF 6.3V	04-5654
	C211	47µF 10V	04-5666
	C212	0.0022µF 50V COG	04-5676
	C213	47µF 10V	04-5666
	C214	10µF 20V	04-5655
	C221	10µF 20V	04-5655
	C231	0.1µF 50V X7R	04-5663
	C311	1µF 35V	04-5656

	Reference	Description	Part Number
TRANSISTORS	Q001	2N70022L	05-5841
	Q002	PQ05SZ11	05-5858
	Q121	2N7002L	05-5840
	Q131	MTD10N05E	05-5839
	Q222	MMBT4403L	05-5842
	Q223	TIP120	05-5782
DIODES			
	CR021-CR022	1N4007	07-6274
	CR031-CR032	1N4007	07-6274
	CR101	1N5817	07-6290
	DS001	LED-HLMP 3502	07-6280
	DS002	LED-HLMP 3000	07-6288
CONNECTORS	J130	CONN RAPC712X	13-8445
	P2	CONN-640456-4 MTA100	13-8088
	P3	CONN-640456-2 MTA100	13-8073
RESISTORS			
	R001	2.21K 1/8W 1%	12-7835
	R002	3.32K 1/8W 1%	12-7870
	R003	2.21K 1/8W 1%	12-7835
	R011	475K 1/8W 1%	12-7859
	R012	1 GIG-OHM FHV-1 2%	12-7686
	R013	TRMR-1 MEG	09-6911
	R014-R015	100 K 1/4W 5%	10-7023
	R021	100 K 1/4W 5%	10-7023
	R111	1M 1/8W 1%	12-7844
	R112-R113	1 GIG-OHM FHV-1 2%	12-7686
	R114	10 MEG 1/4W 5%	12-7955
	R115	1M 1/8W 1%	12-7844
	R116	TRMR-1 MEG	09-6911
	R117	1K 1/8W 1%	12-7832
	R121	1M 1/8W 1%	12-7844
	R123	432K 1/8W 1%	12-7874
	R124	33.2K 1/8W 1%	12-7842
	R125	182K 1/8W 1%	12-7860
	R126	1K 1/8W 1%	12-7832
	R127	4.75K 1/8W 1%	12-7858
	R201	7.5K 1/8W 1%	12-7847
	R211	100K 1/8W 1%	12-7834
	R212	165K 1/8W 1%	12-7877
	R213	22.1K 1/8W 1%	12-7843
	R214	1.27K 1/8W 1%	12-7902
	R215	33.2K 1/8W 1%	12-7842

	Reference	Description	Part Number
	R221	22.1K 1/8W 1%	12-7843
	R222	4.75K 1/8W 1%	12-7858
	R223	1K 1/8W 1%	12-7832
	R224	TRMR-10K 3269W1-103	09-6931
	R225	18.2 K 1./8W 1%	12-7968
	R226	10K 1/8W 1%	12-7839
	R227	1K 1/8W 1%	12-7832
	R228	10K 1/8W 1%	12-7839
	R330	TRMR-10K 64W103	09-6787
INTEGRATED CIRCUITS			
	U111	TLC27M7ID	06-6292
	U112	TLC372ID	06-6290
	U121	ICM7555CBA	06-6300
	U221	LM285M-1.2	05-5845
	U222	LMC7111BIM5X	06-6410
TRANSFORMERS	T121	XFMR-M 416-3 HV	4275-145
MISCELLANEOUS	10 EA.	CLOVERLEAF RECPT-01106809-000	18-8771

LED Driver Board, Drawing 420 x 4

	BOARD	Assembled LED Driver	5420-005
INTEGRATED CIRCUIT			
	U140-U141	SN75512	06-6369
RESISTORS	R148	200 OHM	10-7006
	R149-R151	10K	10-7016
RESISTOR NETWORKS	RN142-RN144	150 OHM	12-7741
CONNECTORS	P23	CONN-640456-5 MTA100	13-8057

	Reference	Description	Part Number
Main Board, Drawing 215 x 60	BOARD	Assembled Main	5215-087
CAPACITORS	C101	68µF 6.3V	04-5654
	C201	68µF 6.3V	04-5654
	C211	0.1µF 50V X7R	04-5663
	C231	0.01µF 50V X7R	04-5664
	C301	2700µF 35V E	04-5621
	C311	27pF 100V COG	04-5658
	C312	27pF 100V COG	04-5658
	C501	68µF 6.3V	04-5654
	C502	0.1µF 50V X7R	04-5663
	C503	10µF 20V	04-5655
	C504-506	0.1µF 50V X7R	04-5663
	C601	10µF 20V	04-5655
	C602	4.7µF 20V	04-5653
	C603	10µF 20V	04-5655
	C611	4.7µF 20V	04-5653
	C701	0.1µF 50V X7R	04-5663
	C711	0.1µF 50V X7R	04-5663
DIODES	CR101-CR103	CXSH-4 EB33	07-6358
TRANSISTORS	Q211	MMBT4403LT1	05-5842
	Q401	2N7002L	05-5840
	Q402	MMBT4403LT1	05-5842
	Q501	MMBT3904T	05-5841
CONNECTORS	P7	CONN-1-640456-1 MTA100	13-8059
	P14	CONN-640456-2 MTA100	13-8073
	P15	CONN-640456-6 MTA100	13-8095
	P16	CONN-640456-3 MTA100	13-8081
	P17	CONN-640456-5 MTA100	13-8057
	P18	CONN-640456-3 MTA100	13-8081
	P20	CONN-1-640456-4 MTA100	13-8141
RESISTORS	R9	10 MEG 1/4W 5%	12-7955
	R15	100K 1/8W 1%	12-7834
	R031	1K 1/8W 1%	12-7832
	R131-R139	2.21K 1/8W 1%	12-7835
	R211-R212	10K 1/8W 1%	12-7839
	R231	100K 1/8W 1%	12-7834
	R331	22.1K 1/8W 1%	12-7843
	R401	10K 1/8W 1%	12-7839

	Reference	Description	Part Number
	R402	10 OHM 1/8W 1%	12-7836
	R403	10K 1/8W 1%	12-7839
	R431	10K 1/8W 1%	12-7839
	R501	10K 1/8W 1%	12-7839
	R503	73.2K 1/8W 1%	12-7895
	R504	10K 1/8W 1%	12-7839
	R505	82.5K 1/8W 1%	12-7849
	R506	1M 1/8W 1%	12-7844
	R507	8.25K 1/8W 1%	12-7838
	R508	10K 1/8W 1%	12-7839
	R701	TRMR-5K 3269W1-502	09-6918
	R1310	100K 1/8W 1%	12-7834
INTEGRATED CIRCUITS	U121	NETWORK-22K DIP 14 PIN	12-7577
	U122	LTC1045CN	06-6371
	U131	TLC372ID	06-6290
	U211	X24C02S8I	06-6299
	U231-U233	TLC372ID	06-6290
	U301	EE87C51FA1	06-6286
	U331	TLC372ID	06-6290
	U421	CD74HC573M	06-6298
	U431	N82C54	06-6309
	U501	LM358D	06-6312
	U502	LM285M-2.5	06-6291
	U511	CXK581000AM-70LL	06-6385
	U531	N82C54	06-6309
	U601	MAX232CSE	06-6382
	U611	CD74HC138M	06-6339
	U612	CD74HC00M	06-6308
	U631	N82C54	06-6309
	U711	CD74HC08M	06-6313
SWITCHES	S111	92-851.342	08-6726
	S121	92-851.342	08-6726
	S211	92-851.342	08-6726
	S221	92-851.342	08-6726
	S321	92-851.342	08-6726
VOLTAGE REGULATIORS	VR201	LT1129CQ-5	06-6372
RESISTOR NETWORKS	RN031	NETWORK-1K	12-6975
	RN121	NETWORK-4.7 K 8P SIP	12-7706
	RN331	NETWORK-4.7 K	12-7918
	RN421	NETWORK-22 K	12-7917

	Reference	Description	Part Number
CRYSTALS	Y311	MICRO 6.144 MHZ	01-5262
TRANSFORMERS	T401	MODEL 177 AUDIO	4275-083
LED Display Board, Drawing 420 x 226	BOARD	Assembled LED Display	5420-226
CAPACITORS	C1	68µF 10V	04-5654
	C2	0.01 µF 25V	04-5744
INTEGRATED CIRCUITS	U1	A6812EEP	06-6635
LEDs	DS1-DS4	LED-E121, GREEN	07-6310
	DS5	LED-E186, JUMBO BRIGHT RED	07-6437
	DS7-DS8	LED-E112-RED	07-6390
	DS12-DS13	LED-E112-RED	07-6390
	DS14	LED-120 YELLOW	07-6309
RESISTORS	R1-R2	150OHM, 1/10th W, 1%	12-7141
	R4-R7	150OHM, 1/10th W, 1%	12-7141
	R8-R10	10K, 1/10th W, 1%	12-7083
	R11-R12	150OHM, 1/10th W, 1%	12-7141
	R17-18	150OHM, 1/10th W, 1%	12-7141
CONNECTOR	J1	640456-5 MTA100X5	13-8057
Resistor Board, Drawing 2 x 894	BOARD	Assembled Model 133 Resistor	5002-894
	R1	3.32M, 250 mW, 1%	12-7967
Zero X Amp Board, Drawing 420 x 600	BOARD	Assembled Preamplifier	5420-600
CAPACITORS			
	C1	100pf 100V	04-5743
	C2	2kV	04-5971

	Reference	Description	Part Number
	C3	10µF 10V	04-5757
	C4	0.1µF 25V	04-5744
	C5	10µF 10V	04-5757
	C6	0.001µF 2kV	04-5838
TRANSISTORS	Q1	RK7002AT116	05-5931
RESISTORS			
	R1	100K 100mW 1%	12-7082
	R2	21.5K 250mW 1%	12-7001
	R3	0 OHM	12-8013
	R4	10K 100mW 1%	12-7839
	R5-R6	100K 100mW 1%	12-7082
	R7	4.75K 100mW 1%	12-7149
	R8	1M 250mW 1%	12-7844
	R9	100K 250mW 1%	12-7834
	R10	154K 250mW 1%	12-7197
INTEGRATED CIRCUITS	U1	LM1815	06-6937
CONNECTORS	P1	CONN-640456-6 MTA100	13-8095
	P2	CONN-640456-3 MTA100	13-8081
Interconnect Board, Drawing 420 x 178	BOARD	Assembled Interconnect	5420-178
CONNECTORS	P1	CONN-1-640457-0 MTA100-RA	13-8168
	P2	CONN-1-640456-0 MTA100	13-8066
Wiring Diagram, Drawing 420 x 162			
SWITCHES	S1	DM62J12S205PQ	08-6715
	S2-S3	BZ-2RD-A2-MICRO	08-6538
TRANSFORMER	T1	XFMR-CFP302 115/230V	22-9908

	Reference	Description	Part Number
CONNECTORS	J1	CONN-640456-2 MTA100	13-8073
	J2	CONN-640456-4 MTA100	13-8088
	J4	CONN-1-640456-4 MTA100	13-8141
	J14	CONN-640456-2 MTA100	13-8073
	J17	CONN-640456-5 MTA100	13-8057
	J18	CONN-640456-3 MTA100	13-8081
	J19	CONN-1-640456-1 MTA100	13-8059
	J23	CONN-640456-5 MTA100	13-8057
MISCELLANEOUS			
	DS01	UNIMORPH TEC-3526-PU	21-9251

Section 10

Drawings and Diagrams

Panel and Plate Assembly Drawings

Main Chassis Front Panel, Drawing 420 x 171

Front Panel LED, Drawing 420 x 170

Schematics and Component Layouts

HVPS Board, Drawing 436 x 53
HVPS Board Component Layout Drawing 436 x 54 (2 sheets)

LED Display Driver Board, Drawing 420 x 4
LED Display Driver Board Component Layout, Drawing, 420 x 89

Main Board, Drawing 215 x 60 (4 sheets)
Main Board Component Layout, Drawing 215 x 103 (2 sheets)

LED Display Board, Drawing 420 x 226
LED Display Board Component Layout, Drawing 420 x 227A (2 sheets)

Model 133-2 Connector/Resistor Board, Drawing 2 x 894
Model 133-2 Connector/Resistor Component Layout, Drawing 2 x 895A (2 sheets)

Preamplifier Board, Drawing 420 x 600
Preamplifier Board Component Layout, Drawing 420 x 601 (2 sheets)

Interconnect Board, Drawing 420 x 178
Interconnect Board Component Layout, Drawing 420 x 179

Wiring Diagram, Drawing 420 x 162

REV #	ALTERATIONS	DATE	BY
	VALID	07-22-98	TJR

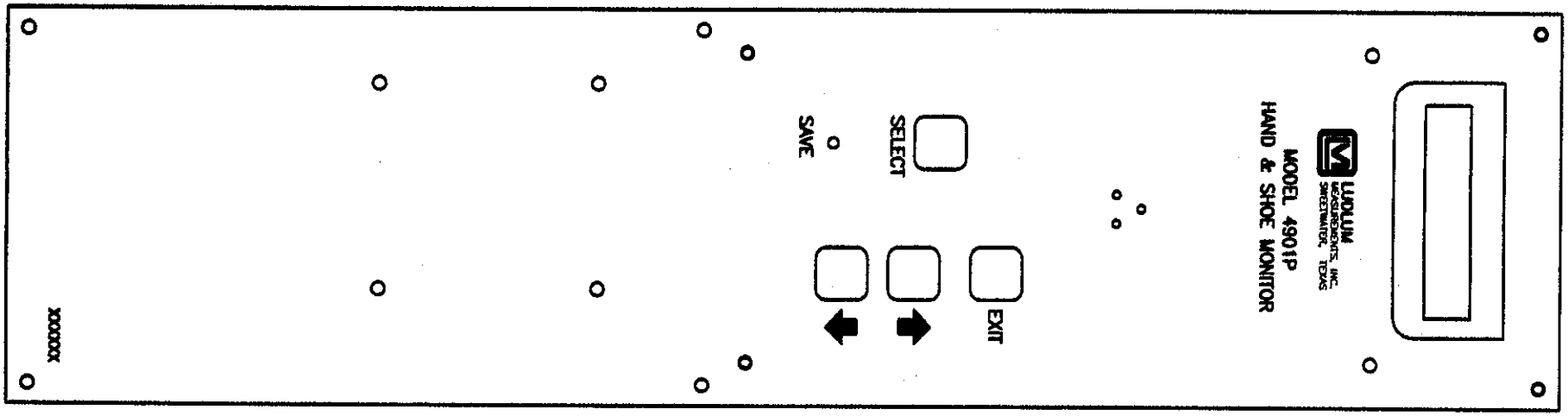

DWN	DATE	CHECKED	APPROVED
TJR	07-22-98	7-22-98	JGW 7-22-98

TITLE: M 4901P MAIN ELEC. PANEL

LUDLUM MEASUREMENTS, INC. 501 OAK STREET SWEETWATER, TEXAS 79556

SERIES 420

SHEET 171

REV #	ALTERATIONS	DATE	BY
	VALID	07-22-98	TJR

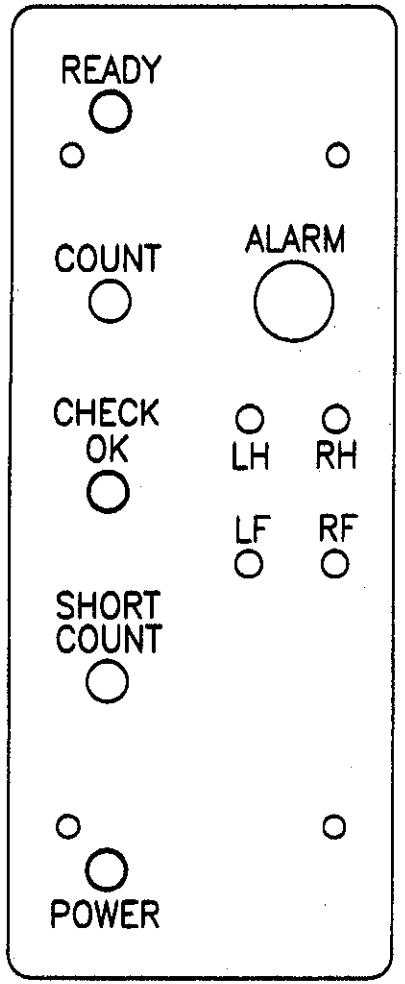

DWN	DATE	CHECKED	APPROVED
TJR	07-22-98	7-22-98	JGW 7-22-98

TITLE: M 4901P LED DISPLAY

LUDLUM MEASUREMENTS, INC.
501 OAK STREET
SWEETWATER, TEXAS 79556

SERIES 420

SHEET 170

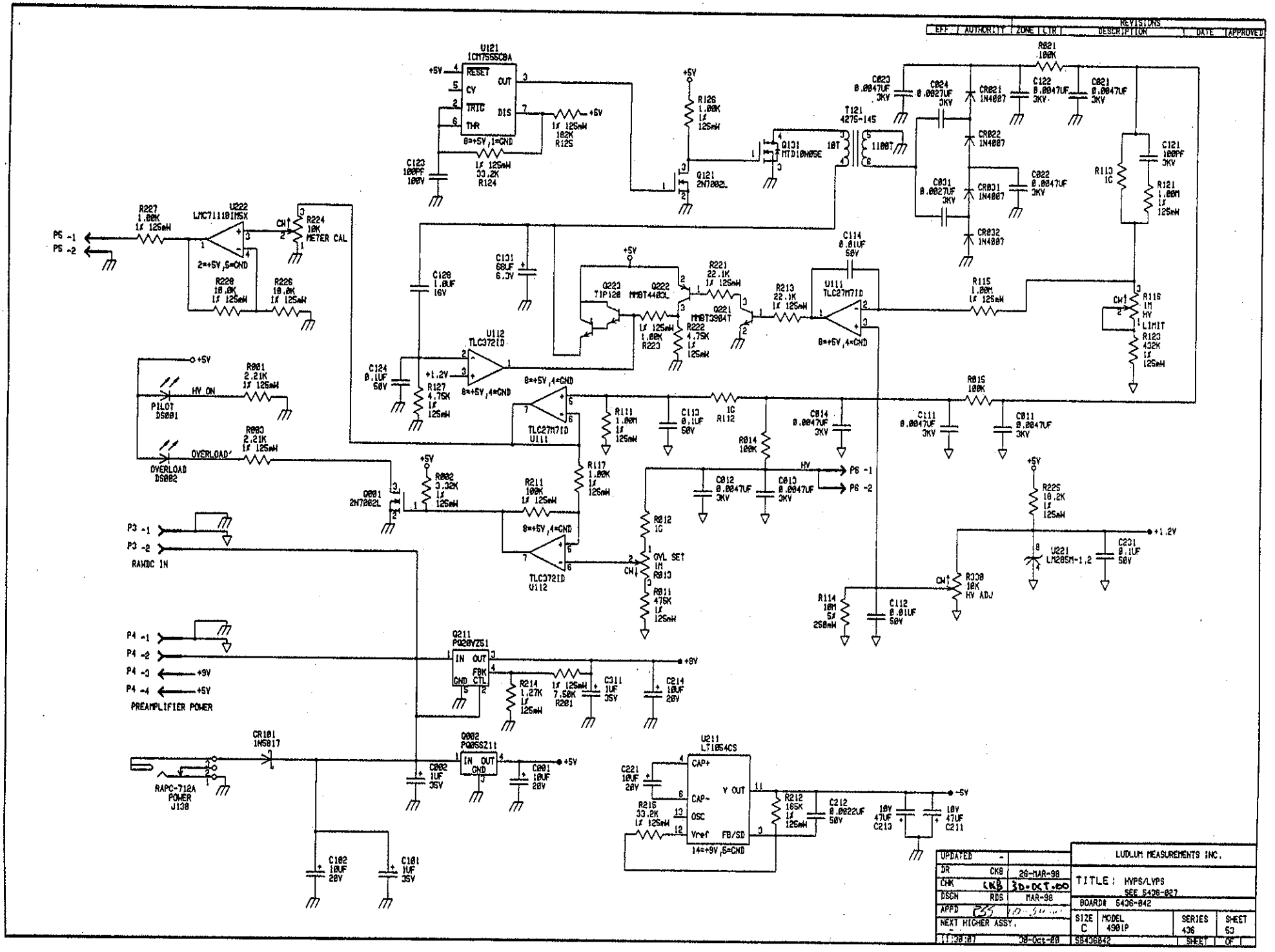
REVISIONS
EFF | AUTHORITY | ZONE | LTR | DESCRIPTION | DATE | APPROVED
U121 ICM7555C8A
RESET
CV
TRIG
THR
OUT
DIS
8=+5V,1=GND
R125 1% 125mW 182K
R124 1% 125mW 33.2K
C123 100PF 100V
R126 1.00K 1% 125mW
Q121 2N7002L
Q131 MTD10N05E
T121 4275-145
10T
1100T
C023 0.0047UF 3KV
C024 0.0027UF 3KV
CR021 1N4007
CR022 1N4007
C031 0.0027UF 3KV
CR031 1N4007
CR032 1N4007
C022 0.0047UF 3KV
R021 100K
C122 0.0047UF 3KV
C021 0.0047UF 3KV
C121 100PF 3KV
R113 1G
R121 1.00M 1% 125mW
R116 1M HV LIMIT
R123 432K 1% 125mW
R115 1.00M 1% 125mW
C114 0.01UF 50V
U111 TLC27M71D
8=+5V,4=GND
R213 22.1K 1% 125mW
R221 22.1K 1% 125mW
Q221 MMBT3904T
Q222 MMBT4403L
Q223 TIP120
R222 4.75K 1% 125mW
R223 1.00K 1% 125mW
C131 68UF 6.3V
C128 1.0UF 16V
U112 TLC372ID
8=+5V,4=GND
C124 0.1UF 50V
R127 4.75K 1% 125mW
+1.2V
R227 1.00K 1% 125mW
U222 LMC7111BIM5X
2=+5V,5=GND
R228 10.0K 1% 125mW
R226 10.0K 1% 125mW
R224 10K METER CAL
P5 -1
P5 -2
R001 2.21K 1% 125mW
HV ON
PILOT DS001
R003 2.21K 1% 125mW
OVERLOAD
OVERLOAD DS002
Q001 2N7002L
R002 3.32K 1% 125mW
R211 100K 1% 125mW
R117 1.00K 1% 125mW
TLC27M71D U111
TLC372ID U112
R111 1.00M 1% 125mW
C113 0.1UF 50V
R112 1G
R014 100K
C014 0.0047UF 3KV
C111 0.0047UF 3KV
C011 0.0047UF 3KV
R015 100K
C012 0.0047UF 3KV
C013 0.0047UF 3KV
HV
P6 -1
P6 -2
R012 1G
GVL SET 1M R013
R011 475K 1% 125mW
R225 18.2K 1% 125mW
U221 LM285M-1.2
C231 0.1UF 50V
+1.2V
R114 10M 5% 250mW
C112 0.01UF 50V
R330 10K HV ADJ
P3 -1
P3 -2
RANDC IN
P4 -1
P4 -2
P4 -3
P4 -4
+9V
+5V
PREAMPLIFIER POWER
Q211 PQ20VZ51
IN OUT
GND CTL
FBK
R214 1.27K 1% 125mW
R201 1% 125mW 7.50K
C311 1UF 35V
C214 10UF 20V
+8V
CR101 1N5817
RAPC-712A POWER J130
Q002 PQ05SZ11
C002 1UF 35V
C001 10UF 20V
C102 10UF 20V
C101 1UF 35V
U211 LT1054CS
CAP+
CAP-
OSC
Vref
V OUT
FB/SD
14=+9V,5=GND
C221 10UF 20V
R215 33.2K 1% 125mW
R212 165K 1% 125mW
C212 0.0022UF 50V
10V 47UF C213
10V 47UF C211
-5V
UPDATED
DR CKB 26-MAR-98
CHK LKB 30-OCT-00
DSGN RDS MAR-98
APPD
NEXT HIGHER ASSY.
11:30:07 30-Oct-00
LUDLUM MEASUREMENTS INC.
TITLE: HVPS/LVPS
SEE 5436-027
BOARD# 5436-042
SIZE C
MODEL 4901P
SERIES 436
SHEET 53
S8436042
SHEET OF

Do Not Place P5, Q211, U211 and R122

Top Layer (Scale 2:1)

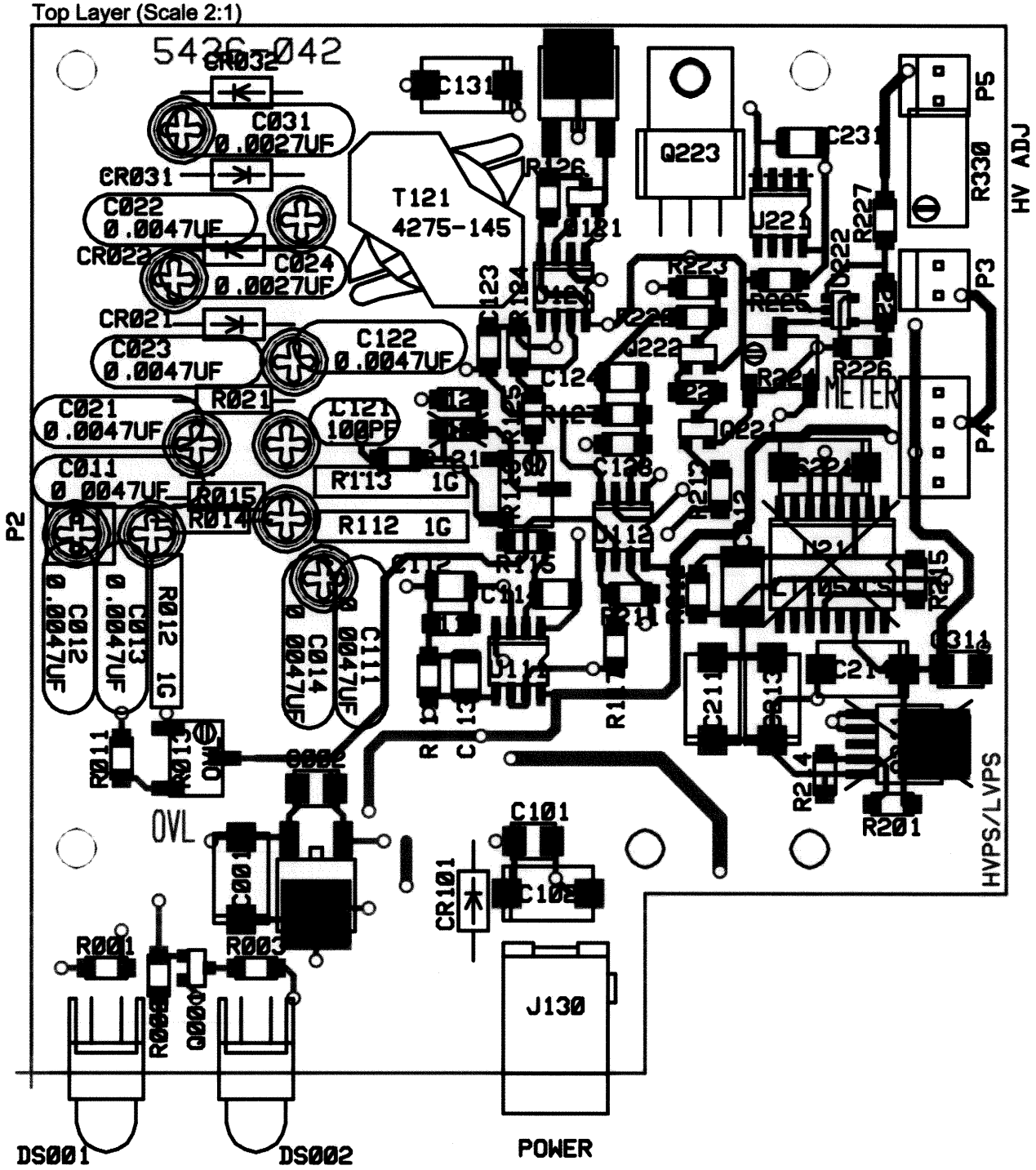

LUDLUM MEASUREMENTS				
Part: 5436-042	Model: 4901P			
Desc: HVPS/LVPS BOARD				
Design: RDS	Date: 7/17/97		Rev:	1
Drawn: PAB	Date: 1/4/2023	SHEET	SERIES	SHEET
Apr: RDS	Date: 1/5/23	1 of 3	436	54
\\freedom\pcb\Projects\LMI\M 4901P\5436-042\Rev1				

Bottom Layer (Scale 2:1)

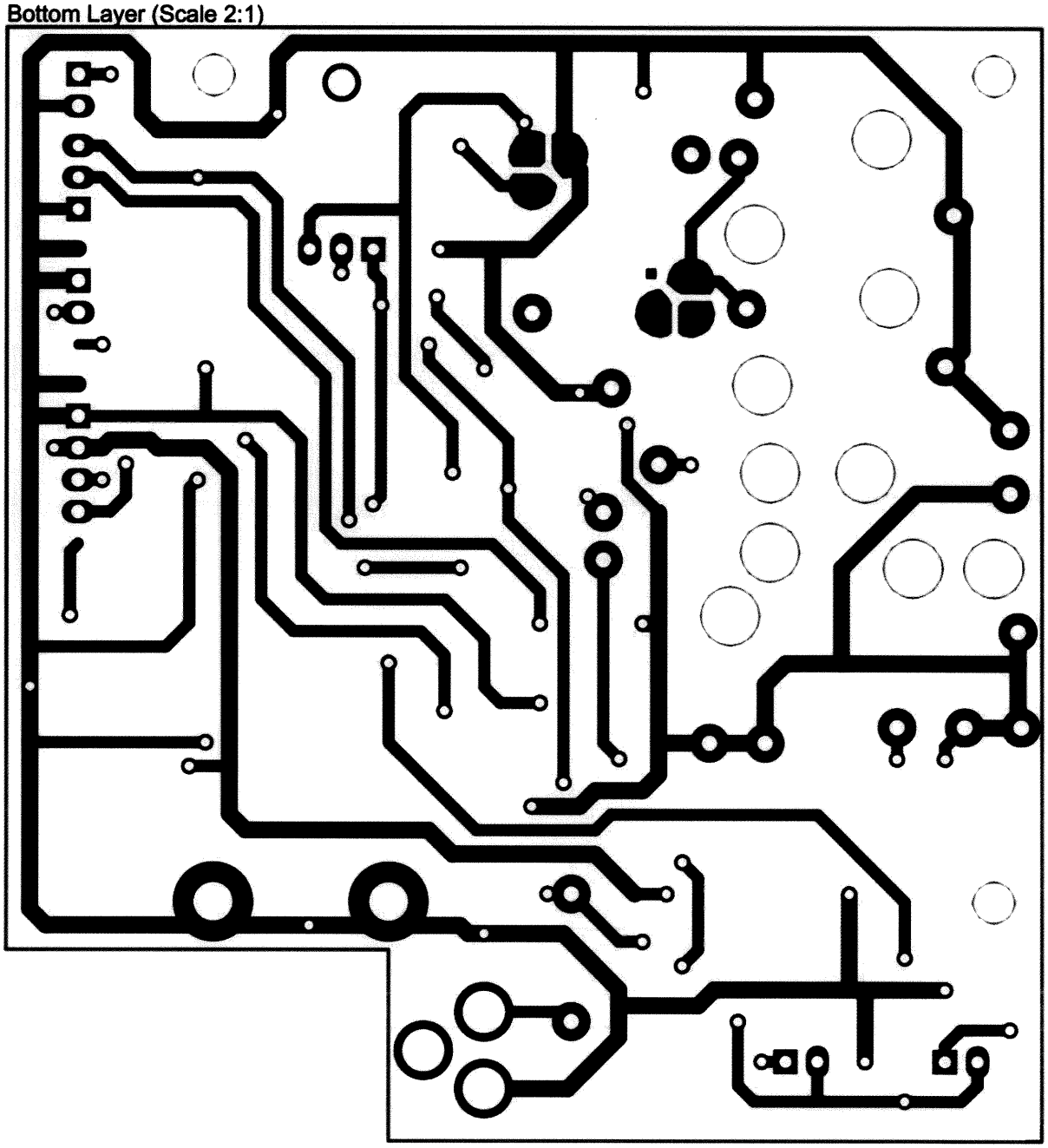

LUDLUM MEASUREMENTS				
Part: 5436-042	Model: 4901P			
Desc: HVPS/LVPS BOARD				
Design: RDS	Date: 7/17/97		Rev:	1
Drawn: PAB	Date: 1/4/2023	SHEET	SERIES	SHEET
Apr: RDS	Date: 4 Jan 23	2 of 3	436	54
\\freedom\pcb\Projects\LMI\M 4901P\5436-042\Rev1				

REVISIONS						
ECF	AUTHORITY	ZONE	LTR	DESCRIPTION	DATE	APPROVED

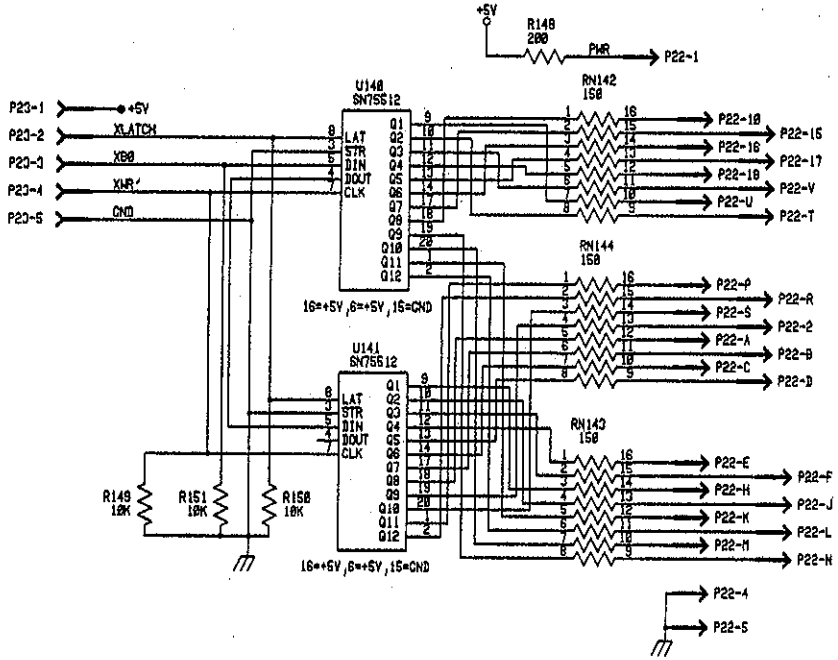

UPDATED	-	LUDLUM MEASUREMENTS INC.	
DR RDS	06APR94	TITLE: LED DISPLAY DRIVER	
CHK CKR	22-JUL-98		
DSGN RDS	06APR94	BOARD# 5420-005	
APPD [illegible]	7-22-98	SIZE C / MODEL 4901/4901-1/52 / SERIES 420 / SHEET 4	
NEXT HIGHER ASSY. -		07:42:57 22-JUL-98 S0420005	SHEET 1 OF 1

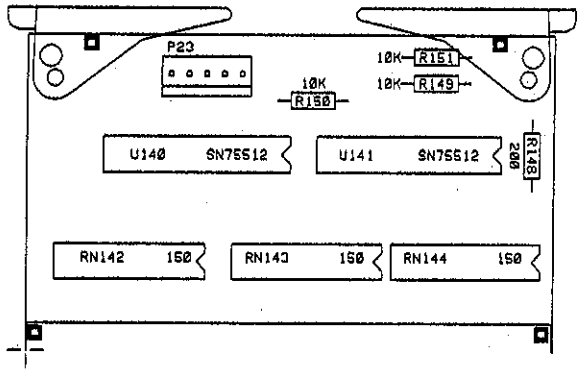

LUDLUM MEASUREMENTS INC. SHEETWATER, TX.

DR	RDS	07JUN94	TITLE: LED DRIVER		
CHK	CKD	22JUL98			
DSGN	RDS	07JUN94	BOARD# 5420-005		BS420005
APP	BS	2-22-99	MODEL 4901/52	SERIES 420	SHEET 89
07:44:11		22-Jul-98	COMP SIDE ☐	SLDR SIDE ☐	OUTLINE ☒
COMP PASTE ☐		COMP MASK ☐	SLDR PASTE ☐	SLDR MASK ☐	

U_215087R1P2
215087R2P2.SchDoc

U_215087R1P3
215087R2P3.SchDoc

U_215087R1P4
215087R2P4.SchDoc

LUDLUM MEASUREMENTS, INC.
PO Box 810
501 Oak Street
Sweetwater, Texas 79556
U.S.A. 1-800-622-0828

Drawn: AC	9/27/2023	Title: MAIN BOARD		
Design: RDS	05/22/2012	Model: 52		
		Board#: 5215-087		
Approve: RDS 20 Sep 23		Sheet: 1 of 4	Series	Sheet
Print Date: 9/27/2023 2:14:17 PM		Rev: 2	215	60
W:\Projects\LM\M 52\5215-087\Rev2\215087R2P1.SchDoc				

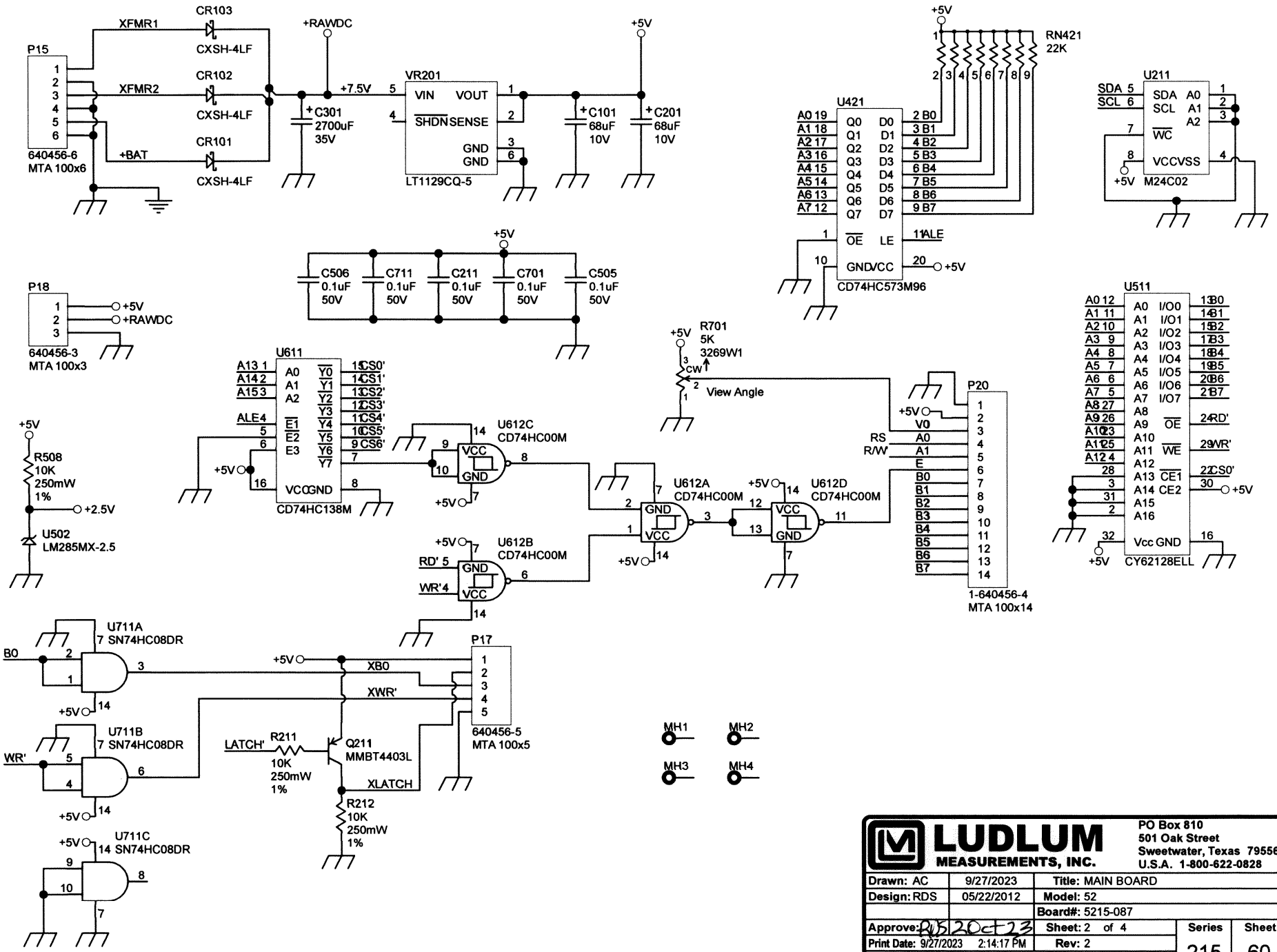

LUDLUM MEASUREMENTS, INC.		PO Box 810 501 Oak Street Sweetwater, Texas 79556 U.S.A. 1-800-622-0828	
Drawn: AC	9/27/2023	Title: MAIN BOARD	
Design: RDS	05/22/2012	Model: 52	
		Board#: 5215-087	
Approve: RDS 20ct23		Sheet: 2 of 4	Series: 215 / Sheet: 60
Print Date: 9/27/2023 2:14:17 PM		Rev: 2	
W:\Projects\LM\M 52\5215-087\Rev2\215087R2P2.SchDoc			

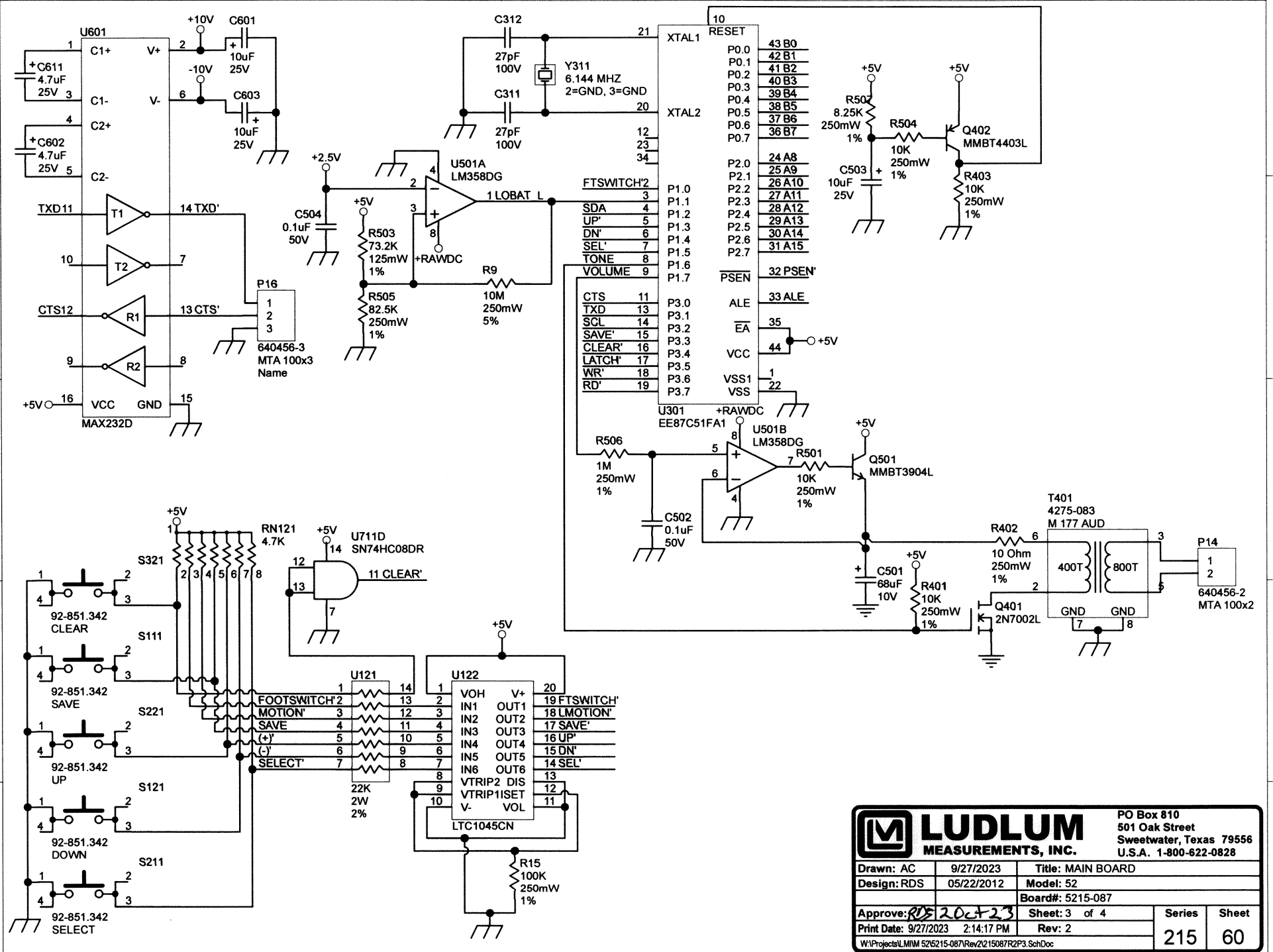

LUDLUM MEASUREMENTS, INC.		PO Box 810 501 Oak Street Sweetwater, Texas 79556 U.S.A. 1-800-622-0828	
Drawn: AC	9/27/2023	Title: MAIN BOARD	
Design: RDS	05/22/2012	Model: 52	
		Board#: 5215-087	
Approve: RDS 20ct23		Sheet: 3 of 4	Series 215 / Sheet 60
Print Date: 9/27/2023 2:14:17 PM		Rev: 2	
W:\Projects\LMIM 52\5215-087\Rev2\215087R2P3.SchDoc			

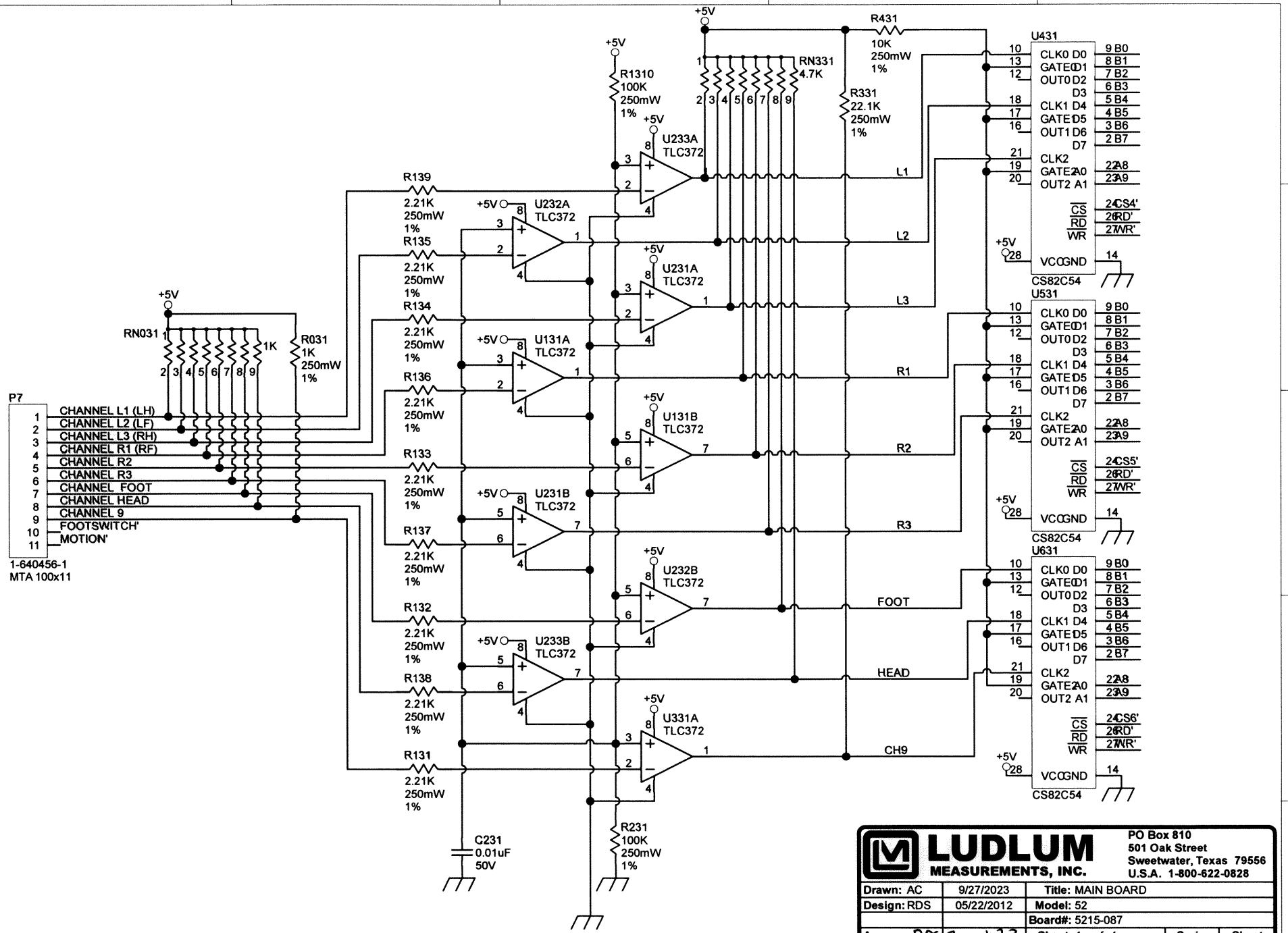

LUDLUM MEASUREMENTS, INC.		PO Box 810 501 Oak Street Sweetwater, Texas 79556 U.S.A. 1-800-622-0828	
Drawn: AC	9/27/2023	Title: MAIN BOARD	
Design: RDS	05/22/2012	Model: 52	
		Board#: 5215-087	
Approve: RDS 20ct23		Sheet: 4 of 4	Series 215 / Sheet 60
Print Date: 9/27/2023 2:14:18 PM		Rev: 2	
W:\Projects\LM\M 52\5215-087\Rev2\215087R2P4.SchDoc			

Top Layer (Scale 1.125:1)

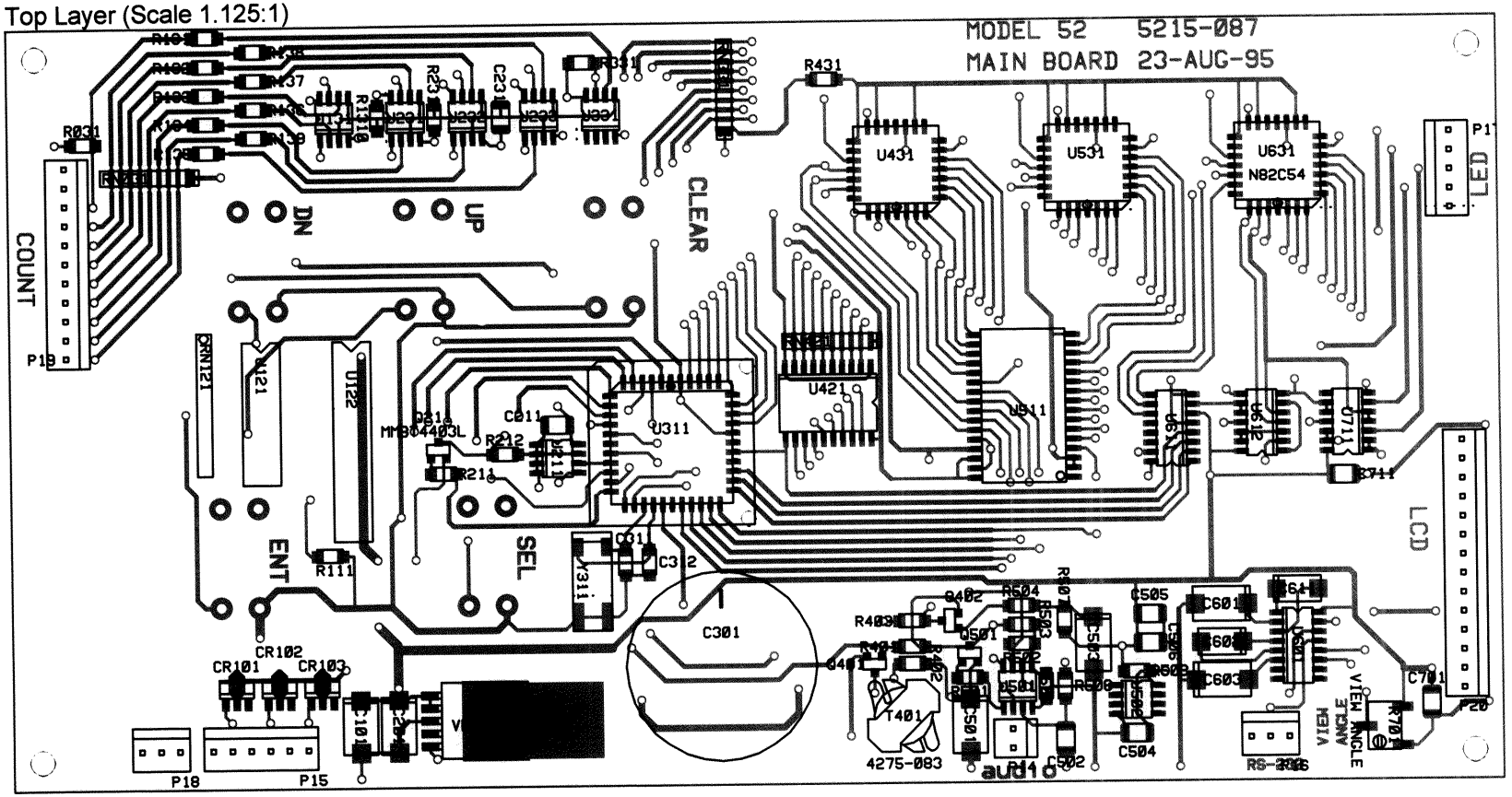

LUDLUM MEASUREMENTS					
Part: 5215-087	**Model:** 52				
Desc: MAIN BOARD					
Design: RDS	**Date:** 9/27/2023		**Rev:**	2	
Drawn: PAB	**Date:** 9/27/2023	**SHEET**	**SERIES**	**SHEET**	
Apr: RDS	**Date:** 20ct23	1 of 3	215	103	
W:\Projects\LMI\M 52\5215-087\Rev1\215087R1.PcbDoc					

Bottom Layer (Scale 1.125:1)

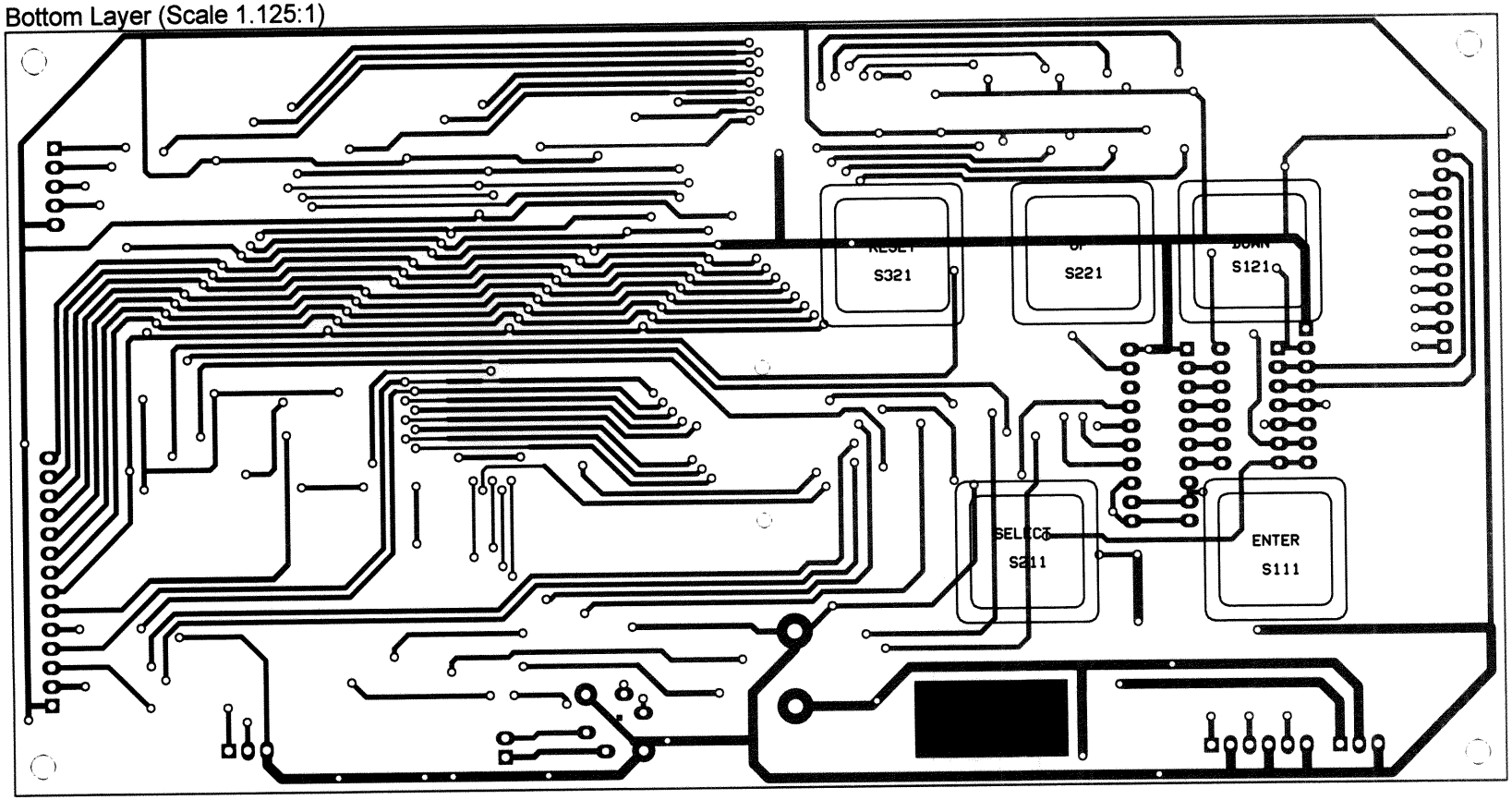

LUDLUM MEASUREMENTS					
Part: 5215-087		**Model:** 52			
Desc: MAIN BOARD					
Design: RDS	**Date:** 9/27/2023			**Rev:**	2
Drawn: PAB	**Date:** 9/27/2023	**SHEET**		**SERIES**	**SHEET**
Apr: RDS	**Date:** 20ct23	2 of 3		215	103
W:\Projects\LMI\M 52\5215-087\Rev1\215087R1.PcbDoc					

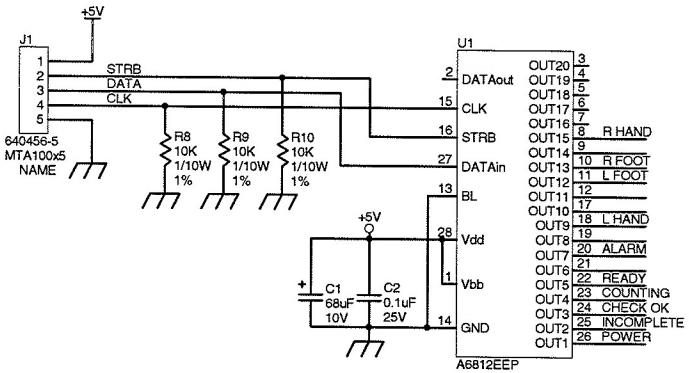

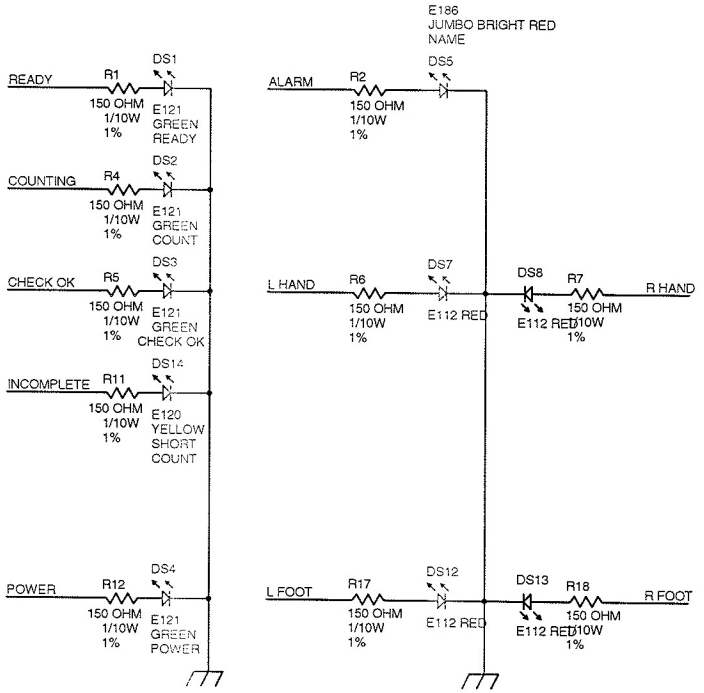

LUDLUM MEASUREMENTS, INC.		PO Box 810 501 Oak Street Sweetwater, Texas 79556 U.S.A. 1-800-622-0828	
Drawn: JK	19JUL06	Title: LED DISPLAY	
Design: RDS	19JUL06	Model: 4901A & 4901P	
		Board#: 5420-226	
Approved:	8-Sep-2006	Sheet: 1 of 1	Series 420 / Sheet 226
16:37:53		Rev: 1.0	
420226R1.sch			

TopLayer (Scale 1.6:1)

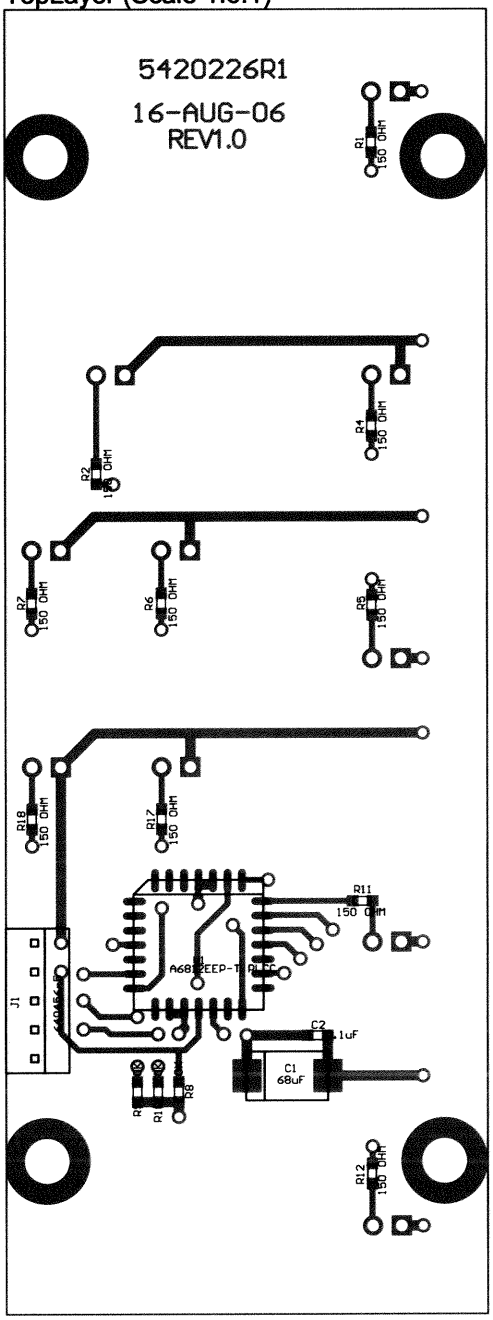

LUDLUM MEASUREMENTS				
Part: 5420-226	**Model:** 4901A & 4901P			
Desc: LED Display				
Design: RDS	**Date:** 07/19/2006		**Rev:**	1
Drawn: PAB	**Date:** 10/6/2022	**SHEET**	**SERIES**	**SHEET**
Apr: RDS	**Date:** 6 Oct 22	1 of 3	420	227A
\\freedom\pcb\Projects\LMI\M 4901A\5420-226\rev1.0				

USE 07-6413 LED SPACERS
5 PLACES

BottomLayer (Scale 1.6:1)

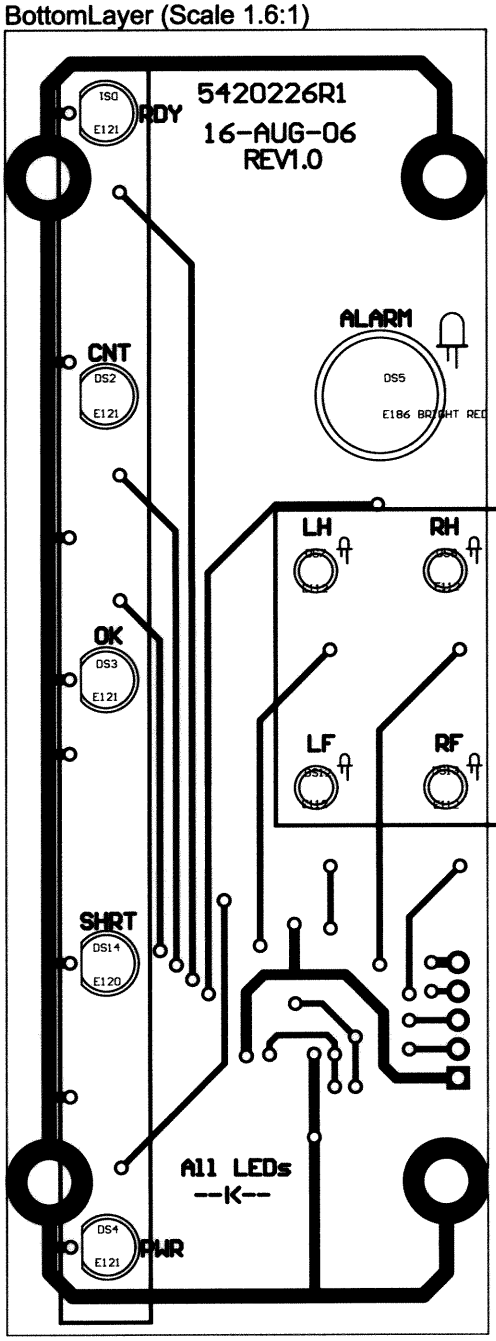

USE 18-9083 LED SPACERS
4 PLACES

LUDLUM MEASUREMENTS				
Part: 5420-226	**Model:** 4901A & 4901P			
Desc: LED Display				
Design: RDS	**Date:** 07/19/2006		**Rev:**	1
Drawn: PAB	**Date:** 10/6/2022	**SHEET**	**SERIES**	**SHEET**
Apr: RDS	**Date:** 6Oct22	2 of 3	420	227A
\\freedom\pcb\Projects\LMI\M 4901A\5420-226\rev1.0				

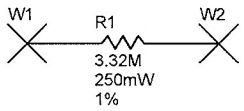

LUDLUM MEASUREMENTS, INC.		PO Box 810 501 Oak Street Sweetwater, Texas 79556 U.S.A. 1-800-622-0828	
Drawn: JK	03/08/2005	**Title:** Connector/Resistor Board	
Design: RDS	03/08/2005	**Model:** 133-2	
		Board#: 5002-894	
Approve: RB 29oct15		**Sheet:** 1 of 1	**Series** 2 / **Sheet** 894
Print Date: 11/7/2013 11:27:19 AM		**Rev:** 1	
W:\Projects\LM\M 133\5002-894\Rev1\002894R1P1.SchDoc			

TopLayer (Scale 15.9252:1)

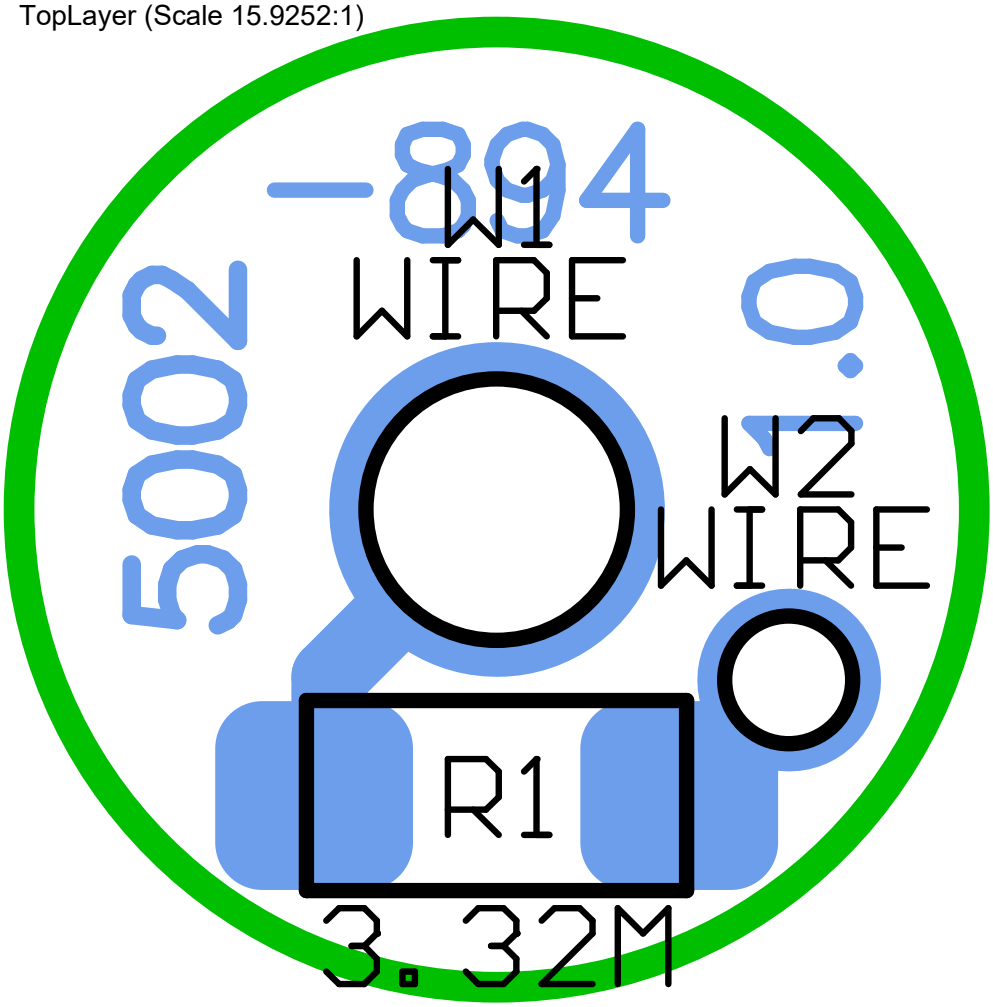

LUDLUM MEASUREMENTS				
Part: 5002-894	**Model:** 133-2			
Desc: Connector/Resistor Board				
Design: RDS	**Date:** 03/08/2005		**Rev:**	1
Drawn: PAB	**Date:** 5/22/2025	**SHEET**	**SERIES**	**SHEET**
Apr: JMC	**Date:** 5/22/2025	1 of 3	2	895A
W:\Projects\LMI\M 133\5002-894\Rev1\002894R1.PcbDoc				

BottomLayer (Scale 15.9252:1)

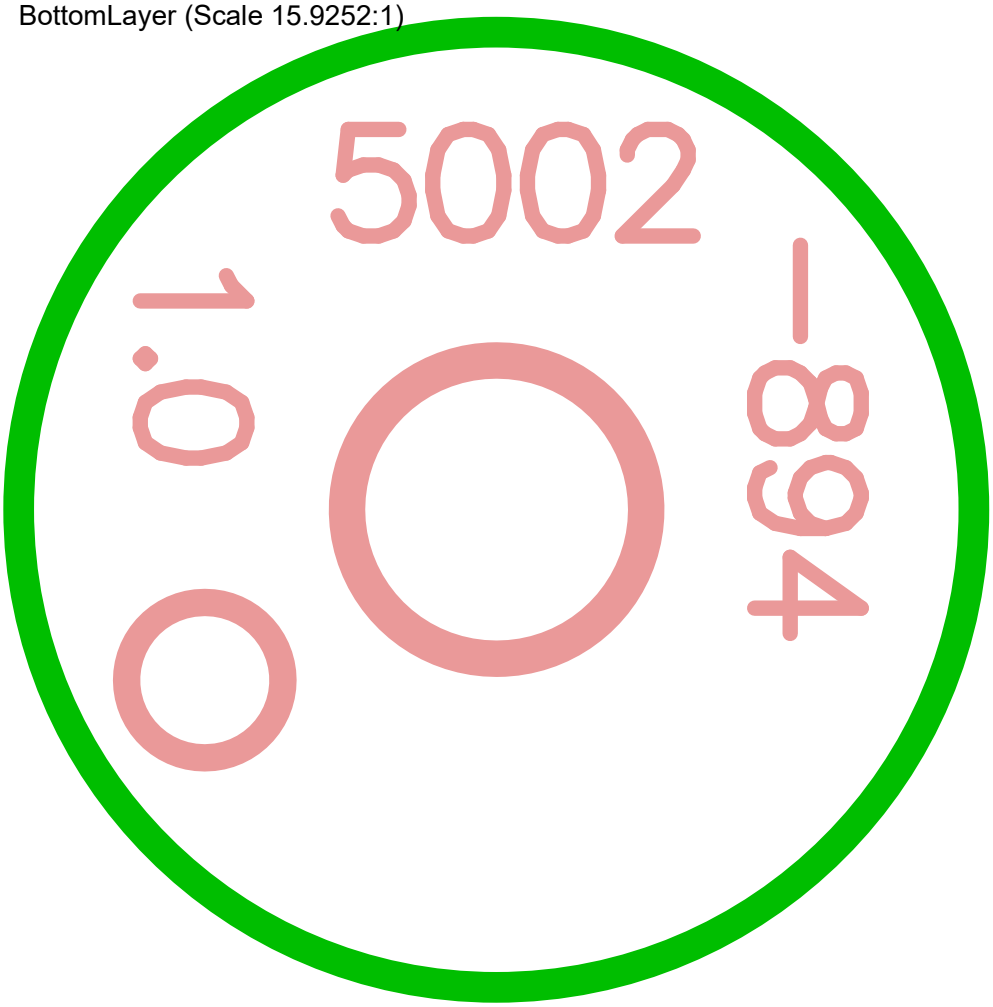

LUDLUM MEASUREMENTS				
Part: 5002-894	**Model:** 133-2			
Desc: Connector/Resistor Board				
Design: RDS	**Date:** 03/08/2005		**Rev:**	1
Drawn: PAB	**Date:** 5/22/2025	**SHEET**	**SERIES**	**SHEET**
		2 of 3	2	895A
W:\Projects\LMI\M 133\5002-894\Rev1\002894R1.PcbDoc				

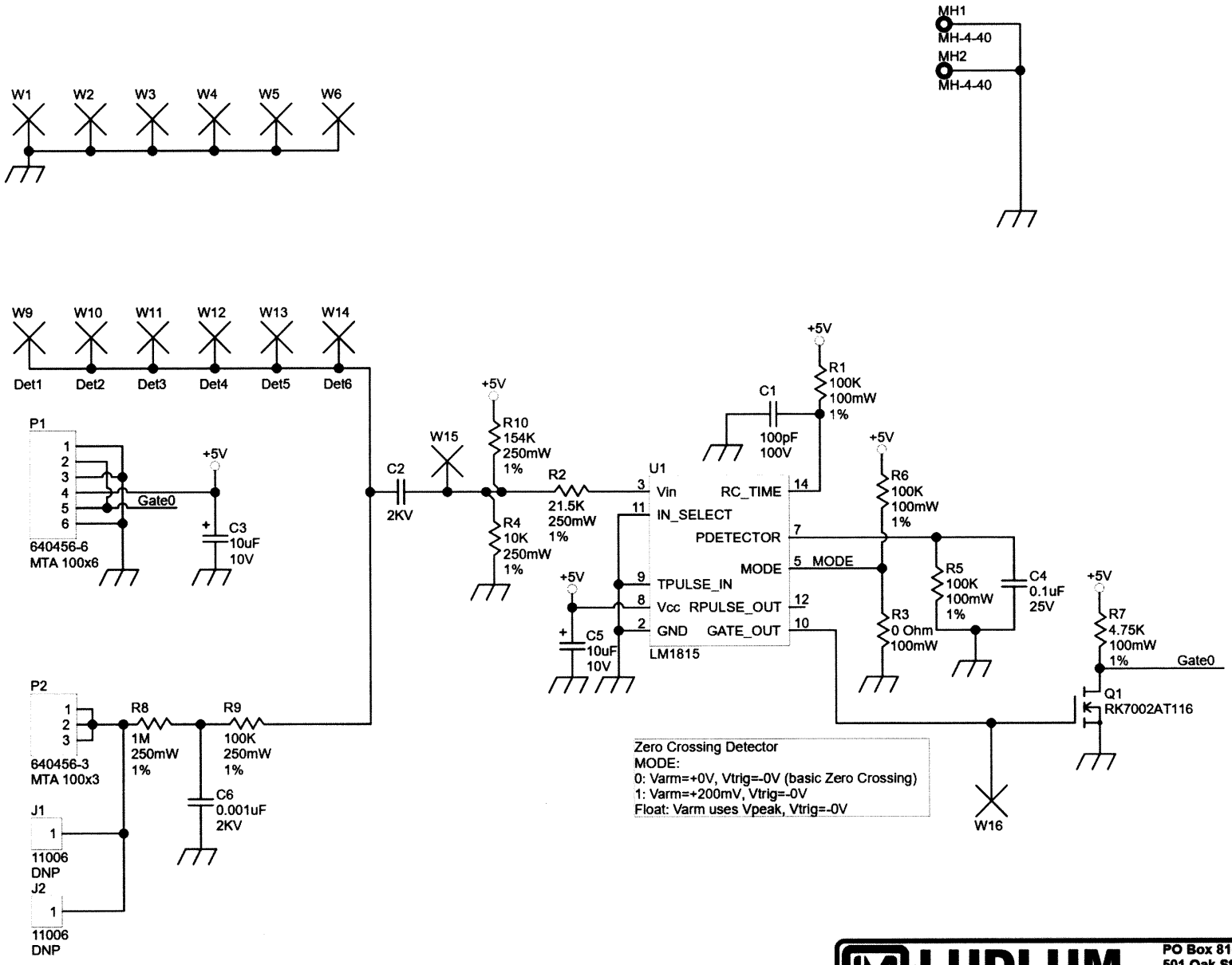

LUDLUM MEASUREMENTS, INC.
PO Box 810
501 Oak Street
Sweetwater, Texas 79556
U.S.A. 1-800-622-0828

Drawn: PAB	2/17/2023	Title: ZERO X AMP		
Design: RDS	2/17/2023	Model: 4901P		
		Board#: 5420-600		
Approve: RDS 17Feb23		Sheet: 1 of 1	Series	Sheet
Print Date: 2/17/2023 9:13:45 AM		Rev: 4	420	600
\\freedom\pcb\Projects\LMM 4901P\5420-600\Rev4\420600R4.SchDoc				

Top Layer (Scale 3.4002:1)

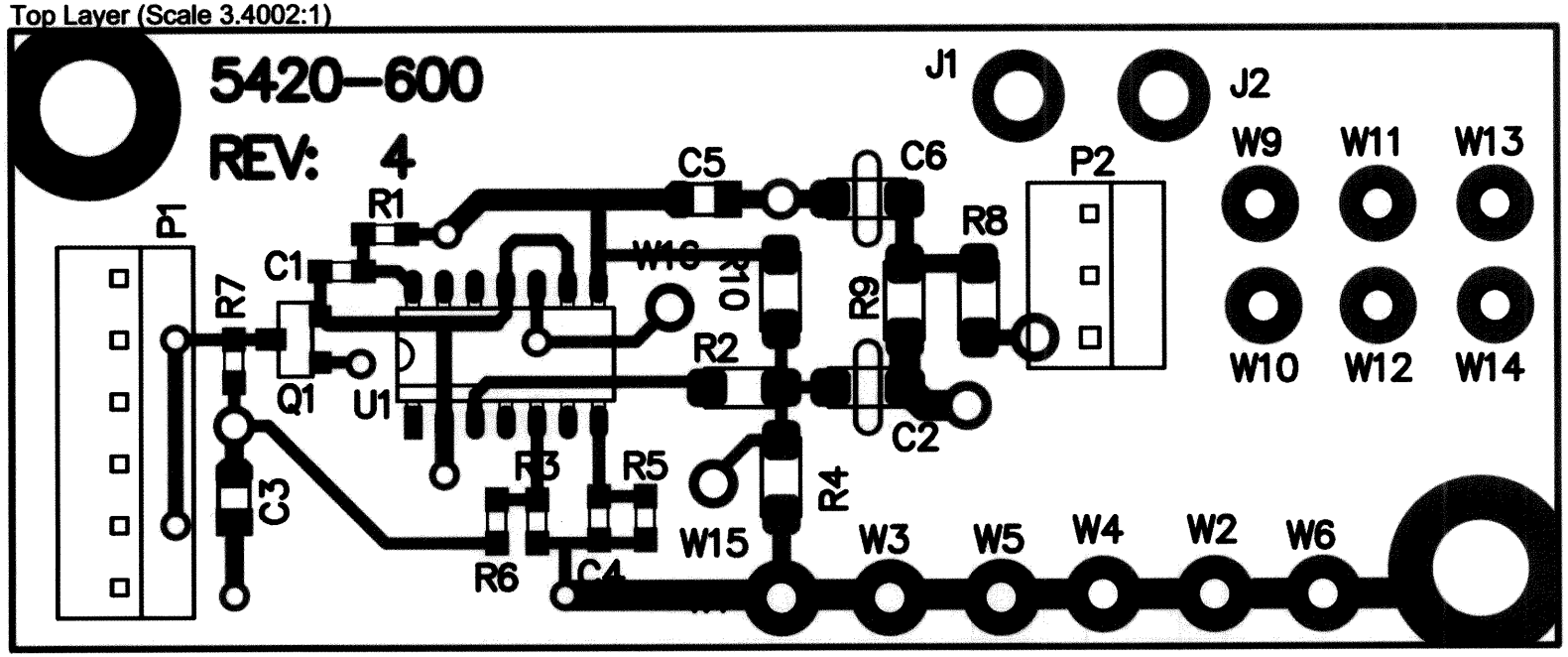

LUDLUM MEASUREMENTS					
Part: 5420-600	Model: 4901P				
Desc: ZERO X AMP					
Design: RDS	Date: 2/17/2023		Rev:	4	
Drawn: PAB	Date: 2/17/2023	SHEET	SERIES	SHEET	
Apr: RDS	Date: 17Feb23	1 of 3	420	601	
\\freedom\pcb\Projects\LMI\M 4901P\5420-600\Rev4					

Bottom Layer (Scale 3.4602:1)

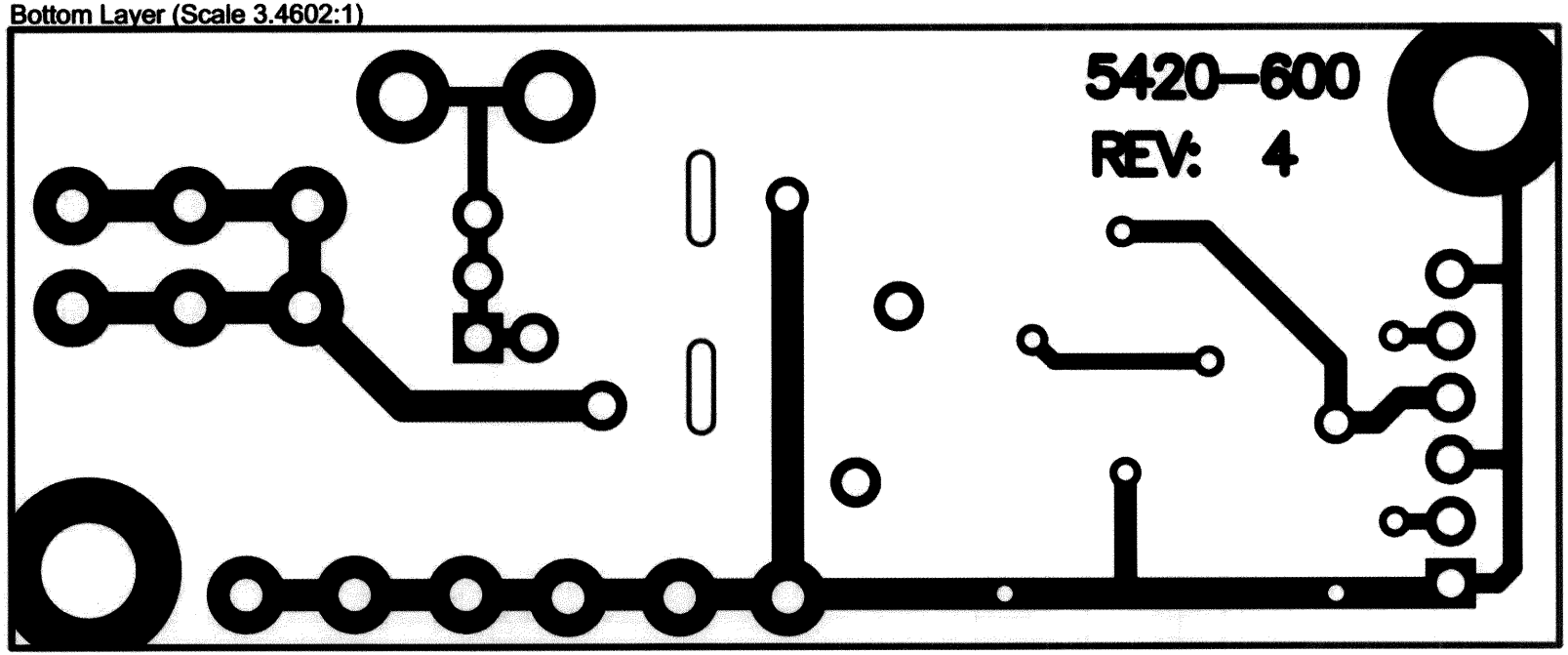

LUDLUM MEASUREMENTS					
Part: 5420-600		Model: 4901P			
Desc: ZERO X AMP					
Design: RDS	Date: 2/17/2023		Rev:	4	
Drawn: PAB	Date: 2/17/2023	SHEET	SERIES	SHEET	
Apr: RDS	Date: 17 Feb 23	2 of 3	420	601	
\\freedom\pcb\Projects\LMI\M 4901P\5420-600\Rev4					

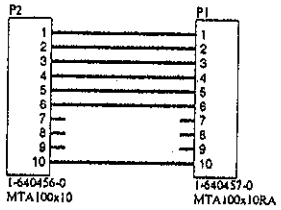

LUDLUM MEASUREMENTS, INC.	PO Box 810 501 Oak Street Sweetwater, Texas 79556 U.S.A. 1-800-622-0828		
Drawn: MG	05-JAN-2000	Title: INTERCONNECT BOARD	
Design: RDS	05-JAN-2000	Model: M4901P	
Check: PW	10-27-00	Board#: 5420-178	
Approve: PW	10-27-00	Sheet: 1 of 1	Series: 420 / Sheet: 178
08:38:45	27-Oct-2000	Rev: 1.0	

X:\Projects\LM\M4901P\M4901P Dds - Documents\5420-178\rev1.0\420X178.drw

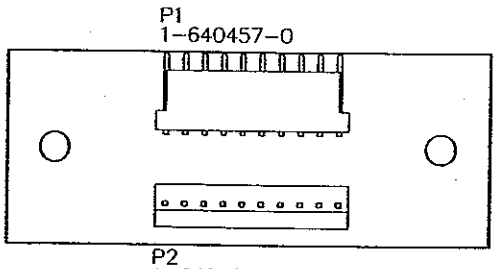

Drawn: MG	06-JAN-2000	Title: INTERCONNECT BOARD	
Design: RDS	06-JAN-2000		
Check: P.W.	10-27-00	Model: M4901P	
Approve: RS	10-27-00	Board#: 5420-178	
Layer: Top Overlay Mech.1 Mech.2 Mech.3 Mech.4 MD: 08:42:05 27-Oct-2000		Rev: 1.0	Series 420 / Sheet 179
bs420178.pcb		SCALE: 1.00	bs420178.pcb

REVISIONS					
ECR	AUTHORITY	ZONE	LTR	DESCRIPTION	DATE	APPROVED

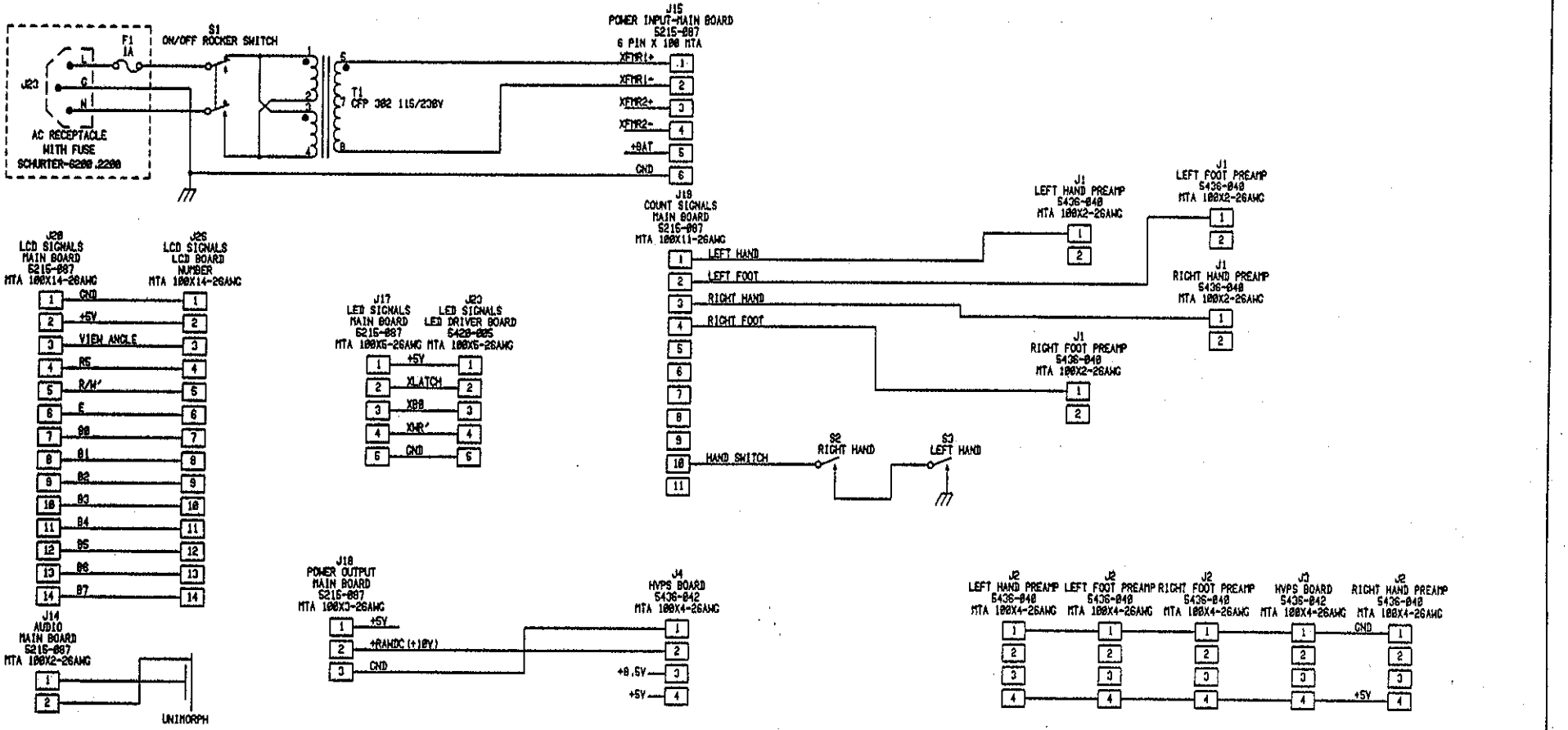

UPDATED	-	LUDLUM MEASUREMENTS INC.
DR ACF	13-JUL-98	
CHK CRB	23-JUL-98	TITLE: WIRING DIAGRAM
DSGN RDS	13-FEB-98	
APPD RDS	23Jul98	BOARD# 428-162
NEXT HIGHER ASSY.		SIZE C / MODEL 4901P / SERIES 428 / SHEET 162
16:48:02	23-JUL-98	W428162 / SHEET OF